COUNTY OF SAN LUIS OBISPO

PUBLIC IMPROVEMENT STANDARDS

Revised August 2022

COUNTY OF SAN LUIS OBISPO
MISSION STATEMENT

The County's elected representatives and employees are committed to serve the community with pride to enhance the economic, environmental and social quality of life in San Luis Obispo County.

DEPARTMENT OF PUBLIC WORKS
VISION STATEMENT

Public Works will be a valued community partner enhancing quality of life for our fellow county residents.

These Standards, and all forms and documents referenced herein, are available online at:
http://www.slocounty.ca.gov/Departments/Public-Works.aspx

COUNTY OF SAN LUIS OBISPO
Department of Public Works
John Diodati, *Director*

Adopted by the Board of Supervisors:

Resolution No.: _____

Adopted: _____

Recommended for County Adoption:

_____
John Diodati
Director of Public Works

Approved: *The plans and specifications contained in this document have been prepared under the direction of the following registered engineer.*

_____
John Waddell, PE
Deputy Director of Public Works

Recommended for Department Approval:

_____
David E. Grim
Development Services Manager

Recommended for Department Approval:

_____
JR Beard, PE
Development Services Engineer

REGISTERED PROFESSIONAL ENGINEER
ROBERT S BEARD JR
No. 78916
exp. 03/2024
CIVIL
STATE OF CALIFORNIA

Description *Page*

STANDARD SPECIFICATIONS

Introduction i
A. Applicability of the Standard and Publications i
B. Definitions in the State Specifications v
C. Definitions in these Public Improvement Standards vi
D. Other Regulatory Agencies vii

Section 1: Improvement Plans 1-1
1.1 Preparation of Plans 1-1
1.1.1 Plan Review Procedure 1-1
1.1.2 Plans Layout 1-2
1.1.3 Plans Format 1-4
1.2 Design Exceptions 1-6
1.3 Americans with Disability Act Requirements 1-7

Section 2: Site Preparation & Grading 2-1
2.1 Design Standards 2-1
2.1.1 Site Preparation 2-1
2.1.2 Grading Design 2-2
2.1.3 Subdivision Grading Process 2-5
2.2 Construction Specifications 2-8
2.2.1 Materials 2-8
2.2.2 Construction 2-8

Section 3: Roadways 3-1
3.1 Design Standards 3-1
3.1.1 Definitions 3-1
3.1.2 Design Criteria 3-2
3.2 Construction Specifications 3-9
3.2.1 Construction and Materials 3-9
3.2.2 Testing 3-14

Section 4: Road Edges 4-1
4.1 Design Standards 4-1
4.1.1 Sight Distance 4-1
4.1.2 Sidewalks 4-1
4.1.3 Multi-Use Paths 4-2
4.1.4 Pedestrian Crossings 4-3
4.1.5 Driveways 4-5
4.1.6 Angled Parking 4-6
4.1.7 Tree Trimming and Removal within the County Right-of-Way 4-7
4.1.8 Trees and Landscaping within the County Right-of-Way 4-8
4.1.9 Other Design Standards 4-9

Description *Page*

Section 5: Drainage & Flood Control 5-1
5.1 Design Standards 5-1
5.1.1 Hydrology 5-1
5.1.2 Hydraulic Design Standards 5-2
5.1.3 Diversion of Drainage 5-3
5.1.4 Alignment of Drainage Facilities 5-4
5.1.5 Drainage Structures 5-4
5.1.6 Flood Control Basins 5-6
5.1.7 Channels and Swales 5-10
5.1.8 Culverts 5-12
5.1.9 Outfalls 5-13
5.1.10 Drainage Pumps 5-14
5.2 Construction Specifications 5-15
5.2.1 Materials 5-15
5.2.2 Installation 5-16

Section 6: Water Supply 6-1
6.1 Design Standards 6-2
6.1.1 Quantity of Water 6-2
6.1.2 Areas of Conflict between Water and Sewer Lines 6-5
6.1.3 Distribution System 6-6
6.1.4 Cross Connections 6-8
6.1.5 Water Well Metering 6-8
6.2 Construction Specifications 6-9
6.2.1 Materials 6-9
6.2.2 Installation 6-13
6.2.3 Testing 6-17
6.2.4 Replacement of Road Surfaces 6-18

Section 7: Wastewater Disposal 7-1
7.1 Design Standards 7-1
7.1.1 Quantity of Flow 7-1
7.1.2 Collection System 7-1
7.1.3 Areas of Conflict Between Sewer and Water Lines 7-3
7.1.4 Areas of Conflict Between Sewer and Storm Drain Lines 7-3
7.2 Construction Specifications 7-3
7.2.1 Materials 7-3
7.2.2 Facilities 7-4
7.2.3 Installation 7-5
7.2.4 Testing 7-8
7.2.5 Replacement of Road Surfaces 7-11

Description *Page*

APPENDICES

Construction Plan Notes
A1: General Notes A-1
A2: Erosion Control Notes A-3
A3: Traffic Control Notes A-5
A4: Traffic Signal Plan Notes A-8
A5: Maintenance Inventory Data Requirements A-11

Concrete
C1: Concrete Mix Designations C-1
C2: Compressive Strength Testing of Concrete C-2
C3: Concrete Mix by Type of Construction C-3

Drainage
D1: Manning's Formula "n" Values D-1
D2: Geotextile Selection D-2

Encroachment
E1: Multiuse Path Requirements for County Right-of-Way E-1
E2: Encroachment Permit Information E-3

Forms
F1: Design Exception Request Application F-1
F2: ADA Design Exception Request Application F-3
F3: Other Forms F-5

Waterline
W1: Waterline Disinfection Procedures W-1
W2: Approved Materials for County Water Systems W-10

Description *Page*

STANDARD DRAWINGS

Rural Road Sections

Rural Road Design Criteria A-1
Rural Road Section – Multiuse Path A-1a
Rural Road Section – <400 Future ADT A-1b
Rural Road Section – 400 to 1,000 Future ADT A-1c
Rural Road Section – >1,000 to 6,000 Future ADT A-1d
Rural Road Section – >6,000 Future ADT A-1e
Rural Road Section – Gravel Road A-1f

Urban Street Sections

Urban Street Design Criteria A-2
Urban Street Section – Multiuse Path A-2a
Urban Street Section – <500 Future ADT A-2b
Urban Street Section – 500 to 6,000 Future ADT A-2c
Urban Street Section – >6,000 to 16,000 Future ADT A-2d
Urban Street Section – >16,000 to 24,000 Future ADT A-2e

Commercial Road/Street Sections

Commercial Road Design Criteria A-3
Commercial Road Section <5,000 Future ADT A-3a
Commercial Street Section 5,000 to 16,000 Future ADT A-3b
Commercial Street Section >16,000 Future ADT A-3c

Road/Street Design

Sag Vertical Curve A-4
Crest Vertical Curve A-4a
Superelevation A-4b

Sight Distance

Stopping Sight Distance - Horizontal Curves A-5
Corner Sight Distance - Intersections & Driveways A-5a
Stopping Sight Distance - Intersections & Driveways A-5b
Sight Distance Clear Zones - Urban Intersections & Driveways A-5c

Road/Street Geometrics

Rural Cul-de-Sac A-6
Urban Cul-de-Sac A-6a
Urban Knuckle A-6b
Urban Bulbout, Angled Parking A-6c
Urban Bulbout, Parallel Parking A-6d
Rural Bus Turnout A-6e
Urban Bus Turnout A-6f

Description *Page*

Driveways: Rural
Layout Standards B-1
For Edge of Pavement (No Dike) B-1a
For Type "A" HMA Dike B-1b
For Type "D" & "E" HMA Dike B-1c
For Edge of Pavement with Culvert B-1d
For High Speed/Volume Roads B-1e
Rural Residential Driveway - Use of Pavers within the Right-of-Way B-1f

Driveways: Urban
Layout Standards B-2
Residential Driveway B-2a

Driveways: Commercial
Layout Standards B-3
Typical Driveway B-3a
High Volume Driveway B-3b
Upward/Downward Approaches B-3c

Concrete Flatwork
Expansion & Control Joints C-1
Type "A" Curb & Gutter C-2
Type "C" Curb C-3
Sidewalks C-4
Curb Ramps C-5
Hot Mix Asphalt (HMA) Dikes C-6
Hot Mix Asphalt (HMA) Sidewalk Terminus Ramp C-7

Drainage & Flood Control
Deep Basin D-1
Shallow Basin D-1a
Urban Catch Basin D-2
Rural Catch Basin - Edge of Pavement D-2a
Rural Catch Basin - HMA Dike D-2b
Roadside Infiltrator D-2c
Manhole for Pipe Dia. 18" to 36" D-3
Manhole for Pipe Dia. >36" D-3a
Sidewalk Underdrain D-4
Sidewalk Underdrain D-4a
Cross Gutter & Spandrels D-5

Description *Page*

Hydrology
Average Annual Rainfall H-1
Time of Concentration H-2
Runoff Coefficients – Developed H-3
Runoff Coefficients – Undeveloped H-3a
Rainfall Intensity H-4
Rock Slope Protection Sizing H-5

Plan Sheet Layout
Standard Title Block L-1
Standard Abbreviations L-2

Miscellaneous
Street Monument for HMA Paved Roads M-1
Street Monument for Gravel Roads M-1a
Road Barricade - Metal Beam M-2
Road Barricade - Temporary Wood Beam M-2a
Sidewalk Barricade M-3
Urban Street Sign M-4
Tree Planting in Right-of-Way M-5
Tree Trimming Methods M-5a
Tree Protection Fencing M-5b
Tree Planting List M-5c
Storm Drain Marker M-6
Parklets - Angled and Parallel Parking M-7

Pavement Restoration
Requirements R-1
Rural Road Widening R-2
Urban Street Widening R-2a
Trench Repair/Bore Pits in HMA Pavement R-3
Concrete Flatwork Repair R-4
Rural Road Slope Repair R-5

Sanitary Sewer
Manhole S-1
Drop Manhole S-1a
Main Cleanout S-2
Service Lateral S-3
Service Lateral for Deep Mains S-3a

Description *Page*

Utilities

Utility Location - Main Lines U-1
Utility Location - Service Laterals U-2
Utility Separation Criteria U-3
Utility Separation Criteria - Case 1: New Sewer Mains U-3a
Utility Separation Criteria - Case 2: New Water Mains U-3b
Trench Section - HMA Paved Surface U-4
Trench Section - Outside HMA Paved Surface U-4a
Trench Section - Shallow Trench U-4b

Waterline

Thrust Block Requirements W-1
Thrust Block Requirements W-1a
Fire Hydrant Installation W-2
Valve Anchor & Box W-3
Water Service Connection W-4
1-1/2” Blow-Off Assembly W-5
2” Blow-Off Assembly W-5a
Air & Vacuum Relief Assembly W-6
Sampling Station W-7
Sampling Station, Below Grade W-7a
Connection Detail W-8
Flushing Detail W-9
Cut-in Tee & Hot Tap Assembly W-10

Introduction

The purpose of establishing these Public Improvement Standards is to help provide public facilities and services that ensure health and safety and to enhance quality of life for the community.

Public improvements are those which will be accepted for use and operation by the public and for maintenance by the County of San Luis Obispo, any County-operated Special District, any independent Special District which does not have its own requirements in these areas, or for any subdivision or permit where the improvement is determined to be of sufficient public benefit that compliance with these standards is required.

The Public Improvement Standards establish the minimum requirements for the design and construction of any public improvements in the County of San Luis Obispo. In many cases prudent design may indicate exceeding the minimum requirements.

The Public Improvement Standards consist of three major components: (1) Design Standards, (2) Construction Specifications, and (3) Standard Construction Drawings. Whereas the Design Standards and Construction Specifications outline design requirements, the Standard Construction Drawings supplement the design requirements and provide graphic detail.

Final authority for County approval of improvement plans or acceptance of constructed improvements rests with the Director of Public Works or their designee.

These standards are not intended to be a substitute for engineering knowledge, experience, or judgment. It is incumbent on the users of these standards to exercise good judgment and where needed, seek guidance from the appropriate professional. Where deviation from these standards is prudent, the user shall follow the Design Exceptions process outlined in Section 1.2.

A. Applicability of the Standard and Publications

This document is supported by various publications, which comprise the standard references for this type of work. In the event of any conflict or discrepancy between these Public Improvement Standards and any of the related publications listed below, these Public Improvement Standards shall take precedence.

The following are considered supplemental design standards and specifications by the Department of Public Works and follow a hierarchy in which the County standard governs. If the County standard does not address the issue, then the appropriate State standard (Caltrans) governs. In cases where the County and State standards do not discuss the design issue, then the appropriate Federal standard governs. County adopted versions and amendments to each of the following documents are considered incorporated by reference into this document:

<u>County Standards:</u>

- County of San Luis Obispo, Public Improvement Standards
- County of San Luis Obispo Fire Department, Fire Safe Standards
- County of San Luis Obispo Drainage and Flood Control Ordinances

- County of San Luis Obispo Stormwater Ordinances (including the Central Coast Regional Water Quality Control Board Post-Construction Stormwater Requirements, Resolution No. R3-2013-0032)
- County of San Luis Obispo Bikeways Plan
- County of San Luis Obispo Low Impact Development Handbook
- County of San Luis Obispo Road Pavement Condition Report
- County of San Luis Obispo Speed Surveys
- County of San Luis Obispo Traffic Volumes
- County of San Luis Obispo Transition Plan, Americans with Disabilities Act (ADA)
- County of San Luis Obispo Board of Supervisors Resolution 2003-412
- County of San Luis Obispo Board of Supervisors Resolution 2008-152
- County Codes:
    - General Plan and Elements
    - Title 8, Health and Sanitation
    - Title 13, Roads & Bridges, Streets & Sidewalks
    - Title 15, Vehicles and Traffic
    - Title 19, Building and Construction Ordinance
    - Title 21, Real Property Division Ordinance
    - Title 22, Land Use Ordinance – Inland (LUO)
    - Title 23, Coastal Zone Land Use Ordinance (CZLUO)
- Circulation Studies:
    - Avila Valley Area
    - Los Osos Area
    - Nacimiento Corridor Study
    - North Coast Area (Cambria, San Simeon)
    - San Miguel Area
    - South County Area (Nipomo, Nipomo Mesa)
    - Templeton Area
- Area Plans, Community Plans, Design Plans, and Specific Plans, including:
    - Black Lake Specific Plan
    - Los Osos Community Plan
    - Nacimiento Lake Drive Corridor Study

  - Oceano Revitalization Plan
  - Old Towne Nipomo Plan
  - San Miguel Community Plan
  - Santa Margarita Design Plan
  - Shandon Community Plan
  - West Tefft Street Corridor Plan
  - Woodlands Specific Plan
- Community Drainage Studies:
  - Cambria
  - Cayucos
  - Los Osos
  - Nipomo
  - Oceano
  - San Miguel
  - San Luis Obispo Creek Watershed Drainage Design Manual
  - Santa Margarita
  - Templeton (pending)
- References:
  - Institute of Transportation Engineers (ITE)
    - Residential Street Design and Traffic Control
    - Residential Streets
    - Traffic Calming – State of the Practice
    - Trip Generation Manual
  - American Public Works Association (APWA)
  - American Water Works Association (AWWA)
  - American Society for Testing and Materials (ASTM)
  - Structural Welding Code—Reinforcing Steel, ANSI/AWS D1.4–92, 2011.

<u>State Standards</u>

- CalDAG (California Disabled Accessibility Guidebook)
- Caltrans California Manual on Uniform Traffic Control Devices (CAMUTCD)
- Caltrans Design Information Bulletin (DIB)

  - Caltrans DIB 82-06 Pedestrian Accessibility Guidelines for Highway Projects
- Caltrans Highway Design Manual (HDM)
- Caltrans Local Assistance Procedures Manual (LAPM)
- Caltrans Standard Plans
- Caltrans Standard Specifications
- Caltrans Traffic Manual
- Policy on High and Low Risk Underground Facilities Within Highway Rights of Way
- California Building Code (CBC)
- California Business & Professions Code
  - Professional Engineers' Act
  - Professional Land Surveyors' Act
- California Government Code
  - Subdivision Map Act
  - Streets & Highways Code
  - Vehicle Code
- California Code of Regulations
  - Cal-OSHA Construction Safety Orders
  - General Industry Safety Orders

<u>Federal Standards</u>

- American Association of State Highway and Transportation Officials (AASHTO)
  - A Policy on Geometric Design of Highways and Streets
  - Low Volume Road Design
  - Roadside Design Guide
  - Bridge Design Specifications, Ninth Edition, AASHTO 2020 (U.S. Units)
  - Standard Specifications for Highway Bridges
  - Standard Specifications for Structural Supports for Highway Signs, Luminaires and Traffic Signals
  - Standard Specifications for Transportation Materials and Methods of Sampling and Testing
- Bridge Welding Code, ANSI/AASHTO/AWS
- ADAG (Americans with Disabilities Act Guidelines)

- PROWAG (Pedestrian Right-of-Way Accessibility Guidelines)
- National Association of City Transportation Officials Urban Bikeway Design Guide

Other publications may need to be referenced as appropriate.

B. Definitions in the State Standard Specifications

In the State Standard Specifications, the intent and meaning of the terms that are used shall be as defined in Section I of the State Standard Specifications except as herein below noted or revised.

Contractor. Any person or persons, firm, partnership, corporation or combination thereof, who has/have entered into a contract with any person, persons, corporation, company, special district, or the County of San Luis Obispo as party or parties of the second part, or his/her/their legal representatives, for the construction of any public improvements or portion of any public improvements within the County of San Luis Obispo.

Department. The County of San Luis Obispo acting by and through its Department of Public Works, including the Director and their duly authorized representatives, either employed by or contracting with the Department, acting within the scope of the particular duties delegated to him/her.

Director. The Director of the Department of Public Works of the County of San Luis Obispo, acting directly or through their duly authorized representatives, either employed by or contracting with the Department, acting within the scope of the particular duties delegated to him/her.

Engineer. (1) Where the duties described indicate the acceptance or approval of the project or the plans therefore, or any other duties and functions of the Department or Director as described in these Public Improvement Standards, Engineer shall mean the Director of the Department of Public Works, Development Services, of the County of San Luis Obispo, acting directly or through their duly authorized representatives, either employed by or contracting with the Department, acting within the scope of the particular duties as delegated. (2) Where the duties described indicate the functions and responsibilities for the preparations of the plans for the project and the other duties assigned to the Project Engineer in these Public Improvement Standards for the construction, inspection, and certification of the project, Engineer shall mean the Project Engineer as defined below. (3) Where the duties described indicate authorization of payment for the construction of the improvements for the project, Engineer shall mean as follows: (a) for County-funded projects it shall mean the County of San Luis Obispo acting through the lead agency for the project; (b) for all other projects it shall mean the Developer as defined below – the County of San Luis Obispo shall be a third party and the agreement between the Developer and the Contractor shall control.

Laboratory. Any testing agency or testing firm, which has been licensed by the State of California to act in such capacity and meeting the requirements of the Department.

State. When the State Specifications are applicable, the word "State" as used in the State Specifications shall mean the State of California and its political subdivision, the County of San Luis Obispo.

C. Definitions in these Public Improvement Standards

In these Public Improvement Standards, the intent and meaning of the terms that are used shall be as defined below.

Contractor. Any person or persons, firm, partnership, corporation or combination thereof, who has/have entered into a contract with any person, persons, corporation, company, special district, or the County of San Luis Obispo as party or parties of the second part, or their legal representatives, for the construction of any public improvements or portion of any public improvements within the County of San Luis Obispo.

County. The County of San Luis Obispo, California.

Department. The County of San Luis Obispo acting by and through its Department of Public Works, including the Director and their duly authorized representatives, either employed by or contracting with the Department, acting within the scope of the particular duties delegated to him/her.

Developer. The owner of land where any public improvement is proposed to be constructed or their designated representative.

Director. The Director of the Department of Public Works of the County of San Luis Obispo, acting directly or through their duly authorized representatives, either employed by or contracting with the Department, acting within the scope of the particular duties as delegated.

Encroachment Permit. Authorization by the Department to conduct work, reconstruct, or place improvement in established County Rights-of-Way. No work or improvement shall be conducted outside the limits of the permit. Encroachment permits are required pursuant to Chapter 13.08 of the County of San Luis Obispo Code and Chapter 5.5 (commencing with Section 1450) of Division 2 of the California Streets and Highways Code.

Engineer of Work/Engineer of Record/Project Engineer. The engineer, legally authorized to practice Civil Engineering in the State of California, designated as being responsible in charge of civil engineering work as defined in the Professional Engineers Act (Business and Professions Code §6700-6799).

Laboratory. Any testing agency or testing firm, which has been licensed by the State of California to act in such capacity and meeting the requirements of the Department.

Public Improvement. Public improvements are those which will be accepted for operation and maintenance by the County of San Luis Obispo, any County-operated Special District, any independent Special District which does not have its own requirements in these areas, or for any subdivision or permit where the improvement is determined to be of sufficient public benefit that compliance with these standards is required.

Public Improvement Standards. The Design Standards, Construction Specifications, and Standard Construction Drawings, which comprise this volume, along with all other standard references, incorporated herein.

Right-of-Way. The strip or area of land vested with the County for public road purposes, either in fee or by easement.

State Standard Specifications. The latest County adopted edition of the Standard Specifications, and associated Standard Plans, Special Notices, and Standard Special Provisions of the State of California, Department of Transportation (Caltrans).

D. Other Regulatory Agencies

Regulatory permits and/or agreements may be required by other State and Federal agencies, including but not limited to the Central Coast Regional Water Quality Control Board, the California Department of Fish and Wildlife, and the U.S. Army Corps of Engineers. Approval of any improvement plans or construction activity by the County does not exempt the project owner from the requirement to comply with the regulations of any of these agencies. Prior to construction of public improvements, the Developer shall provide copies of all such permits to the Department upon demand or document that such permits are not required.

Section 1. Improvement Plans

1.1 Preparation of Plans

Complete plans and specifications for all proposed public improvements, as defined herein, which are not initiated by the Department, shall conform to the requirements of these Public Improvement Standards. Public Improvement plans and specifications shall be submitted to the Department for approval and must receive approval prior to commencing construction of any such improvements.

1.1.1 Plan Review Procedure

A. Plan Check Intake. For the first submittal of plans, the Project Engineer is encouraged to schedule an "intake" appointment, at which time the Department will determine whether all required information has been provided. More information about this process is available from the Department. The first submittal must include a transmittal, engineer of work agreement, plans, soils report (where required), drainage and flood control calculations, and stormwater control plan (where required). Other items may be required by the Department, as determined necessary at the intake appointment. All submittals shall be transmitted electronically and upon review, will be returned to the Project Engineer electronically. All subsequent submittals will be specified by the Department. Plans not conforming to the normal standards of quality and neatness may be rejected.

   Plans that require review by other entities include but are not limited to:

   1. Department of Planning and Building – Project Planner for condition compliance
   2. Department of Parks and Recreation
   3. Department of Public Health – Environmental Health Division
   4. Utility Purveyors – Community Services Districts, PG&E, So Cal Gas, etc.
   5. Local Fire Agency – Cal Fire, Templeton Fire, etc.

   It may be the responsibility of the Project Engineer to submit directly to those entities. Some may require a copy of both the subdivision map and improvement plans with the submittal.

B. Plan Approval. When all corrections have been made to the satisfaction of the Department, the Project Engineer may submit signed, sealed and dated drawings for approval. Plans are not approved until such time as the Department signifies approval by signature on the title sheet of the original drawings. Construction is not authorized until the plans are approved, an encroachment permit has been issued, and a pre-construction meeting has been completed by the Department.

C. Subdivision Bonding Estimate. If the Developer opts to record a map prior to completing conditioned improvements, the subdivision improvement plans and subdivision bonding estimate must first be approved by the Department. More information about this optional

procedure, along with standard forms and agreements to be used for this purpose, may be obtained from the Department.

D. Plan Revisions. There shall be no revisions made to an approved set of plans, unless such revisions are submitted to the Department for approval prior to being constructed. Excepted from approval are any features of the plans that are contrary to, in conflict with, or do not conform to any Federal or State law, County Ordinance or Resolution, or generally accepted engineering practice, in keeping with the standards of the profession, even though such errors, omissions, or conflicts may have been overlooked in the review of the plans.

E. Phased Improvements. Where the improvement plans submitted cover only a portion of the ultimate development, the plans submitted must be accompanied by the approved overall tentative plan or a study if there is no approved overall tentative plan, showing topographic features and proposed improvements of the ultimate development.

1.1.2 Plans Layout

All plans must be prepared on mylar, vellum, or bond, or approved equal, measuring 24" x 36".

A. Earthwork. If any grading is proposed outside the roadway prism, a grading plan shall be submitted with the other required improvement plans. Finished grading shall be depicted by contour lines, spot elevations, or by “top/toe” indications, as determined appropriate by the Department. The grading plan shall include a reference to the project soils report (if applicable), including its title, date, author, and recommendations.

B. Retaining Walls. For any proposed retaining walls, a separate profile sheet shall be provided which depicts the elevation view and typical section for each wall. Structural calculations, stamped and signed by the Project Engineer, must accompany the submittal.

C. Roadway Improvements. Roadway plans and profile sheets shall be of appropriate scale to clearly show the proposed plan layout, along with existing and proposed profiles of all roadways. The boundaries of lots fronting on the roadway, drainage easements, utility easements, slope easements, section lines and corners, and temporary construction easements shall be shown on all roadway improvement sheets, with proper dimensions.

   Appropriate scales:

   Horizontal: 1-inch=20-feet Vertical: 1-inch=2-feet <or> 1-inch=4-feet

   Horizontal: 1-inch=30-feet Vertical: 1-inch=6-feet

   The scale may be varied in rough terrain. Each roadway plan and profile sheet shall include the typical roadway section.

D. Cross Sections. Cross sections shall be provided for all designs involving widening existing roads. The spacing of cross sections shall be based on the characteristics of the project, as determined necessary by the Department.

The following items of work may be depicted together with the roadway improvement plans. However, the Department may require that they be separated from the roadway improvement plans if necessary for clarity.

E. Storm Drainage. Plans for minor drainage facilities may be shown on roadway plans, if appropriate. Plans for major drainage facilities shall conform to the sheet size and scale shown above for roadway improvements. Profiles of all culverts and drainage structures shall be provided, along with the hydraulic grade line.

F. Stormwater. Plans for post-construction stormwater facilities may be shown on roadway plans, if appropriate. Plans shall conform to the sheet size and scale shown above for roadway improvements. Profiles of all culverts and structures shall be provided, along with the hydraulic grade line.

G. Water Supply. Plans for water system layout and improvements shall be submitted on the same plans as the roadways. Improvements outside the roadway prism shall be drawn on separate sheets and to an appropriate scale.

H. Wastewater Disposal. Plans for wastewater disposal systems may be shown on roadway plans, if appropriate. Plans shall conform to the sheet size and scale shown above for roadway improvements. Profiles of all sanitary sewer pipes and structures shall be provided.

I. Utilities. A layout for all utilities including water, sewer, electric, telephone, cable television and gas system improvements shall be submitted on a composite utility plan in an appropriate scale, unless approved otherwise by the Department. Roadway plans shall show placement of utilities in the typical section. The depth and precise location of High Risk utilities shall be shown on the improvement plans in accordance with the Policy on High and Low Risk Underground Facilities.

J. Traffic Control. Plans for work zone traffic control, and for installation of new permanent traffic control devices, shall be drawn on standard sheets and to an appropriate scale. Work zone traffic control must reference the California Manual on Uniform Traffic Control Devices (CAMUTCD). The standard traffic control notes shall be placed on the same sheet. If plans include new permanent traffic control devices, including traffic signals or lighting, the necessary electrical details shall be incorporated into these sheets.

K. Erosion Control. Temporary and permanent erosion control measures are to be shown. The standard erosion control notes shall be placed on the same sheet.

L. Landscape Plans. Landscape plans shall demonstrate that the landscaping, irrigation, and other features proposed within the Right-of-Way comply with these standards including sight distance adequacy, lateral clearance from the roadway, and lateral clearance from sidewalks and other improvements within the Right-of-Way. Evidence of ongoing landscaping maintenance responsibility by the fronting property owner/s or property owner's association must accompany the submittal.

M. Details. The plans shall include one or more sheets entitled "Details," which shall show the following as applicable:

1. Copy of all County Standard Drawings which are referenced in the design
2. Details of all concrete structures
3. Details of drainage and flood control structures
4. Details of stormwater structures

5. Details of any element of the plans required for clarity
6. Miscellaneous details
7. Other agencies' standard details which are referenced in the design
8. Temporary and permanent erosion control standards/details referenced in the design

1.1.3 Plans Format

The following items are to be shown on plans submitted for approval:

A. Title Sheet. On improvement plans exceeding two (2) sheets in the set, a title sheet shall be prepared. The title sheet shall also include an index of sheets, and a signature block for all other agencies involved such as utility companies, fire agencies, community services districts, and any other applicable agencies.

B. Vicinity Map. The title sheet shall include a vicinity map depicting the following:

1. Boundaries of the site, and any Special Districts or City Limits nearby
2. Location of the project within the County, depicting a minimum 1.5-mile radius around the project location
3. North arrow and drawing scale reference
4. Section and/or Grant lines and corners
5. Street names

C. Title Block. Each sheet of the set of drawings, including the title sheet, shall have a standard County title block per Drawing L-1, together with the following information:

1. Sheet title
2. Name and/or permit number of the project
3. Project Engineer's name, professional registration number, seal, and signature, as required by the Professional Engineers' Act
4. Sheet number and total number of sheets
5. Signature blocks for Department approval

D. Right-of-Way. Right-of-Way lines, the boundaries of lots fronting on the roadway, drainage easements, utility easements, slope easements, and temporary construction easements (existing and proposed) shall be shown on the plans. All Right-of-Way and easement lines shall be properly labeled and dimensioned.

E. Survey Monuments. Pursuant to Section 8771(b) of the California Business and Professions Code, existing survey monuments that control the location of subdivisions, tracts, boundaries, roads, streets or highways, or provide survey control, that are within or adjacent to the area of work, shall be located and referenced, and a corner record or record of survey of the references shall be filed with the County Surveyor by or under the direction of a licensed land surveyor or registered civil engineer legally authorized to practice land

surveying. This shall occur prior to the time when any streets, highways, other Rights-of-Way, or easements are improved, constructed, reconstructed, maintained, resurfaced or relocated.

At the time improvement plans are submitted to the County for any construction work within the public Right-of-Way, the improvement plans shall show evidence that the property corner monuments (existing survey monuments both surface and sub-surface) or street centerline monuments that are within or adjacent to the area of work have been searched for by a licensed land surveyor or by a civil engineer licensed to perform land surveying. These monument positions shall be identified on the plans by station and offset from the new centerline, or by state plane coordinates. A listing for the monuments in harm's way shall be shown on the plan set.

During the bid phase of the project, monument preservation shall be listed as a separate line item and be included as part of the construction bid. In the event that any existing survey monument is disturbed in any way by the improvement work, as determined by a licensed land surveyor or registered civil engineer legally authorized to practice land surveying, it shall be reset accordingly, and a corner record or record of survey shall be filed with the County Surveyor prior to the final acceptance of the work by the Department.

F. Topography. All pertinent topographic features which may affect the design, construction and operation of the improvements shall be shown on the plans, including, but not limited to the following:

1. Curbs, sidewalks, and shoulders
2. Existing structures, fences, trees and other foliage
3. Existing surface and subsurface utility lines and facilities
4. High water and frequent inundation limits
5. Roadway lines
6. Storm drains, and drainage ditches
7. Wastewater disposal systems
8. Water lines, and fire hydrants

Full topography shall be provided for a minimum of 50-feet in all directions of a development site, to evaluate drainage conditions.

G. Profiles. The plans shall clearly show the existing and proposed profiles of all roadways, drainage ditches, storm drains, water lines, sanitary sewers, and clearances at structures and power lines.

H. Design Basis. The plans shall include the basis for design as follows:

1. Road Plans: Design Speed (V), Design Volume (ADT), and Traffic Index (TI)
2. Culverts: Slope (S), Design Flow and Storm Interval (QX)
3. Storm Drains: Hydraulic Grade Line (HGL), Slope (S), Design Flow & Storm (QX)

4. Drainage Structures: The numerical quantities for the Rational Method formula (Q=CIA) for the Primary Design Storm
5. Drainage Basins: design volume, design water surface elevation, design inflow (QIN), design outflow (QOUT), tributary area (A), and design infiltration rate, as appropriate.

I. Stationing and Orientation. The stationing on plan and profile sheets shall read from left to right. Insofar as practical, the plans shall be arranged so that the north arrow is either pointed toward the top or to the right edge of the sheet. Wherever possible, stationing shall conform to existing stationing provided by the Department.

J. Benchmark. The plans shall reference a published National Geodetic Survey (NGS) benchmark on datum NAVD 88. Include a description of the benchmark and the datum for its reference elevation. The plans shall indicate a durable local benchmark that will be utilized for the construction of the improvements and shall include an indication of its location on the Vicinity Map or the plans.

K. Basis of Bearings. The plans shall indicate the basis of bearings that will be utilized for construction of the improvements. The plans shall include a description of the points that form the basis of bearings, along with the appropriate reference information.

L. Units of Measurement. The units of measurement on plans submitted to the Department shall be English Units (United States Standard Measures). If an improvement plan includes facilities which are under the jurisdiction of another agency which requires the use of Metric Units, then Metric Units may be used on the plans for County improvements in conjunction with English units.

M. Notes. The title sheet of the plan set shall include the pertinent Department General Notes, as provided in Appendix A. The plans shall also include any special notes unique to the project design shall be shown on the relevant sheet of the plans.

N. Text. The minimum text size shall be 0.08" for full size plans and 0.10" for record maps.

1.2 Design Exceptions

From time to time, unusual site conditions may warrant a deviation from these standards. Where such situations occur, the Engineer of Work may request a design exception. The Engineer of Work shall demonstrate that the proposed deviation adequately addresses public health and safety, long term maintenance, environmental impacts, and orderly community development. Avoiding or reducing project costs is not normally adequate reason for approving a design exception. As these assessments require professional engineering judgment, all proposals for a design exception must be prepared by a registered professional engineer and be approved by the Department.

Requests for a design exception shall be proposed in writing by the Engineer of Work following the prescribed format (see Appendix F). The Engineer of Work must also sign and seal the Design Exception Application to the Department. The Department will provide written response to design exception requests by either approving, conditionally approving, or denying the request.

A. Geometric Control Criteria. Design exceptions to the following geometric control criteria shall be approved by the Director or their designee:

1. Design speed
2. Cross slope
3. Lane and shoulder width
4. Superelevation
5. Horizontal and vertical alignment
6. Horizontal and vertical clearance
7. Stopping sight distance
8. Bridge width
9. Grades
10. Standards otherwise indicated to be approved by the Director, including guardrail layout and materials, driveway sight distance, etc.

B. Other Requirements. Unless otherwise indicated, all other requests for a design exception shall be approved by the Design & Construction Division Manager, the Transportation Division Manager, the Utilities Division Manager, or the Development Services Division Manager as appropriate.

C. Emergency Substitutions. The Department will also consider requests for emergency substitutions involving materials which suddenly become unavailable, provided requests for such emergency substitutions, including all data to show substitutions comply with specifications, are received at least 15 calendar days before date of use.

1.3 Americans with Disability Act Requirements

The Americans with Disability Act (ADA) was signed into Federal law in 1990. ADA seeks to provide equal access to public facilities for all Americans regardless of age or physical ability. Following the Federal law, Title 24 of the California Building Standards Code has also been enacted to further promote equal access to public facilities. These laws have been revised from time to time at both the State and Federal level. Many of these revisions were devised to better address transportation facilities within the Right-of-Way.

Since the ADA requirements are contained within the Federal and State law, the users of these standards are also expected to fully comply with the law. The information included in these standards are provided to assist the user and to help ensure County facilities are also in compliance.

Design Requirements. The design and placement of ADA facilities within the public Right-of-Way including curb ramps and designated parking spaces shall conform to Caltrans Standard Plans and Standard Specifications.

A. Design Aids. The following are useful design aids for understanding and implementing ADA:

1. CalDAG (California Disabled Accessibility Guidebook)
2. ADAG (Americans with Disabilities Act Guidelines)
3. PROWAG (Pedestrian Right-of-Way Accessibility Guidelines)

B. Design Exceptions. Design exceptions to ADA requirements for transportation facilities within the County maintained Right-of-Way shall be approved by the Department's ADA Design Coordinator. Federal regulations allow the use of other accessibility standards if they provide substantially equivalent or greater access as the minimum Federal accessibility standards. Similarly, the California Building Code allows the enforcing agency to make design judgments as to equivalent designs.

Requests for an ADA design exception shall be proposed in writing by the Engineer of Work in a prescribed format (see Appendix F). The Engineer of Work must sign and seal the Design Exception request and submit the application and all support documentation to the Department. The Department will provide written response to design exception requests by either approving, conditionally approving, or denying the request.

Section 2. Site Preparation & Grading

2.1 Design Standards

This section provides standards for all work that is required to prepare a site for construction of any public improvements, as defined in these Public Improvement Standards.

2.1.1 Site Preparation

A. Verification of Underground Utilities. The location of underground utilities shall be verified prior to excavation for all work that is covered by these standards and which also includes excavation, potholing, placement of signs or fence posts, and other risk to underground utilities.

1. The person(s) performing the excavation shall verify the exact location and depth of all utilities including those not shown on the plan prior to start of work.
2. The contractor shall contact Underground Service Alert (USA) at 811 at least 48 hours before, but not more than 10 days before, the excavation.
3. The contractor shall mark the proposed area of excavation in accordance with Underground Service Alert (USA's) guidelines.
4. High risk utilities shall be positively located during the design phase and delineated on the design plans.

B. Clearing and Grubbing. Clearing and grubbing activities shall conform to the State Standard Specifications. Additional requirements shall apply if determined necessary by the project soils and geological report.

C. Tree Removal. All trees to be removed or impacted shall be depicted on the improvement plans and shall be consistent with the environmental determination which was prepared for the project. Required tree removal and/or replacement shall allow for lateral clearance requirements, as defined in this document. No stumps or other vegetative material shall remain or be placed in any fill area which will support any structure or roadway.

D. Removal of Hot Mix Asphalt (HMA) and Concrete. Where existing HMA or concrete pavement will be removed as part of the work, the removal shall conform to the State Standard Specifications.

E. Grinding Hot Mix Asphalt (HMA). Grinding of existing HMA pavement, to prepare for overlay, shall conform to the State Standard Specifications.

F. Disposal of Removed Materials. Debris from removal of any materials from the work area shall be disposed of in a manner which complies with Chapter 22.52 (Inland) or Chapter 23.05 (Coastal) of the County Code.

G. Abandonment of Existing Facilities. Certain existing facilities may be abandoned in place, if approved by the Department, according to the following requirements:

1. Wells. Existing wells which will no longer remain in service shall either be demolished and removed, or abandoned, as determined by the County Department of Public Health, Division of Environmental Health Services.
2. Septic Systems. Existing septic systems which will no longer remain in service shall either be removed or abandoned as determined by the County Department of Planning and Building. A permit from the Department of Planning and Building shall be required for this work. See County Title 19 for additional information.
3. Culverts. Existing drainage culverts which will no longer remain in service shall either be removed or abandoned in place as determined by the Department. If a culvert is removed, the area shall be re-compacted to the requirements in this document, and in the project soils and geological report. If a culvert is abandoned-in-place, it shall conform to the requirements of the State Standard Specifications.

H. Demolition of Structures. Existing structures on a project site proposed to be demolished shall require a demolition permit from the Department of Planning and Building or evidence a demolition permit is not required.

2.1.2 Grading Design

Where applicable, grading constructed for projects permitted by the Department must conform to the provisions of the following references:

- Title 19, Building and Construction Ordinance.
- Title 22, Land Use Ordinance (Inland LUO)
- Title 23, Coastal Zone Land Use Ordinance (CZLUO)
- State Standard Specifications
- California Building Code (CBC)

In addition, grading activity reviewed by the Department will be subject to the requirements listed below.

A. Grading Plan Submittals. All grading plans reviewed by the Department shall address the following requirements in their submittals:

1. Soils and Geological Report. The Department may require a foundation and soils investigation and/or an engineering geologic report to substantiate road designs. For any grading which may or will involve a structure (building pads, retaining wall foundations, etc.) the Department will (a) require that a foundation and soils investigation and/or engineering geologic report be submitted with the plans, or (b) documentation that a foundation and soils investigation and/or engineering geologic report is not required, in accordance with CBC Chapter 18, Section 1803. If a foundation and soils investigation and/or engineering geologic report are required, the preparer of the investigation and/or the report shall provide, prior to plan approval, a letter to the Department stating that the plans were reviewed by him/her and that the plans conform to the investigation and/or the report.

2. Grading Quantities. The Project Engineer shall enumerate the quantity of cut and of fill on the face of the grading plans. When the project site is not anticipated to balance, a note shall be provided on the grading plans stating that the earthwork sending/receiving site shall secure the necessary permits prior to commencing work. When requested, the Engineer of Work shall demonstrate that the necessary permits have been obtained prior to importing or exporting soil.

3. Drainage Plan. All public improvements involving grading shall include a drainage plan in accordance with Section 5 of the Public Improvement Standards.

4. Erosion/Sediment Control Plan. All public improvements involving grading shall include an Erosion and Sediment Control Plan. The grading plans shall include a note identifying that proper dust control shall be maintained at all times during construction. Dust control shall conform to the provisions of the State Standard Specifications.

5. Area of Disturbance. The total area of disturbance for the project as well as the area of disturbance shown on the particular set of plans submitted shall be shown on the Title Sheet of the plans. All projects involving site disturbance in excess of 1.0 acre shall comply with the requirements of the National Pollutant Discharge Elimination System (NPDES). The Developer shall submit the required permit registration documents, including a Notice of Intent (NOI) to comply with the General Permit for Stormwater Discharged Associated with Construction Activity. The Developer shall clearly note on the coversheet the Waste Discharge Identification Number (WDID#) and contact information for the Qualified SWPPP Developer and Practitioner (QSD/QSP). Alternatively, the Developer must provide verification that the CCRWQCB has reviewed the project plans and granted an exemption of enrollment.

B. Maximum Height of Cuts/Fills. The maximum height of cut and fill slopes shall be as required by Title 19 and the CBC, unless a more restrictive limit has been established by the conditions of approval or by the foundation and soils investigation and the engineering geologic report for the project. The design shall incorporate the provision of “benches”, terracing, interceptor drains, and setbacks whenever the slope height requires them, as indicated by Title 19 and the CBC.

C. Maximum Slope outside the County Right-of-Way. The maximum slope of cut and fill slopes shall be as required by Title 19 and the CBC, unless a more restrictive limit has been established by the conditions of approval, or by the foundation and soils investigation and the engineering geologic report for the project, or by other provisions of these Standards.

D. Grading Site Boundaries. Each lot line within a proposed new subdivision shall be considered a “grading site boundary” for purposes of implementing grading setbacks as required by the CBC.

E. Foundation Elevations. All grading designs shall depict on the plans the “point of discharge” which satisfies the requirements of the CBC.

F. Elevation Standards. In Commercial Retail, Commercial Service, Office/Professional and Industrial land use categories, or other sites where determined necessary by the Department, architectural plans for building construction shall use the same benchmark elevation as the

street improvement plans (whether prepared by the Department or by the Project Engineer). The following requirements for the relationship between street improvements and building elevations shall also apply to the architectural plans for building construction:

1. The plans shall depict the finish floor elevation at all building entrances fronting a current or future public street.
2. The plans shall depict the back-of-sidewalk elevations at the locations of all building entrances referenced in #1, based on a typical sidewalk cross-slope of 1.5-percent.
3. The plans shall demonstrate compliance with ADA and CBC requirements for pedestrian access to all building entrances.

G. Drainage Systems on Slopes. Drainage systems on slopes shall be designed as required by Title 19 and the CBC.

H. Slope Easements Required. Slope maintenance easements may be required for any excavation or embankment slopes which are steeper than 5:1 (horizontal: vertical) that extend outside the Right-of-Way. All such easements shall provide additional area for access and working space rights.

I. Retaining Walls. Prior Department approval is required for the construction of any reinforced concrete, reinforced concrete masonry unit (CMU), or mortarless element (gravity) retaining wall being proposed for permit issued by the Department. The following requirements shall apply:

1. Retaining walls are not permitted in County Right-of-Way without prior Department approval. Retaining walls required for development of property adjacent to County Right-of-Way must be constructed within the property boundaries.
2. Retaining walls not within the County Right-of-Way but part of the roadway prism shall be designed by a registered professional engineer.
3. Designs for any retaining wall shall include the location in plan view, a typical cross-section, and an elevation view of the full length of the proposed wall. The Project Engineer shall also provide all design calculations, signed and sealed, to the Department for review along with any applicable foundation and soils investigation or engineering geologic reports. The Engineer of Work shall demonstrate that wall designs are appropriate for the soil and loading conditions.
4. Wood retaining walls shall be no greater than 2-feet in exposed height and shall be considered for landscaping purposes only. Wood retaining walls are not permitted in County Right-of-Way.
5. Any wall greater than 30-inches in exposed height shall include a guard (pedestrian railing) as defined in CBC, or maintenance worker fence as defined by Cal-OSHA.

J. Preservation of Trees. Existing trees within the area of any grading shall be preserved as required by the conditions of approval for the subdivision or land use permit. All trees to be removed or impacted shall be depicted on the grading plan. Tree protection fencing detail M-5b shall be implemented for all protected trees. The Department may require additional

trees to be removed for safety or maintenance reasons. All trees to be removed must have an environmental determination prior to removal.

K. Stockpile Requirements. The following design criteria applies to stockpile permits issued by the Department:

1. All stockpile location/s shall be shown on the grading plan and erosion control plan as well as the SWPPP, if a SWPPP is required. Stockpiles shall be located a minimum of 50-feet away from drainage structures and water bodies such as creeks, rivers, and drainage courses. Stockpiles shall not be located in environmentally sensitive areas.
2. Stockpiles may not be located on slopes greater than 20-percent.
3. No stockpile shall remain longer than 6-months without prior written approval from the Department.
4. All stockpiles shall be shaped, not left in an "end dump condition". Stockpiles shall have a slope of 3:1 or flatter with the top surface sloped downhill at a minimum of 0.5-percent and a maximum of 5-percent.
5. Maximum height of any one stockpile shall be 20 feet.
6. No one stockpile shall exceed 5,000-cubic yards. Adjacent stockpiles shall not be located closer than 50-feet to each other, measured from edge to edge.
7. All stockpiles, regardless of time of year, shall have perimeter control BMPs installed immediately around the perimeter of the stockpile at the toe of slope. Perimeter control and stockpile containment measures shall be maintained until the stockpile is removed.
8. Stockpiles remaining inactive for longer than one week shall be stabilized and secured to control dust and minimize potential erosion. Acceptable stabilization methods include: tackifier (soil binder), erosion control blankets, secured geotextile fabric, or seed and hydromulch. Visqueen plastic is not recommended for native uncontaminated soils but may be utilized when necessary. All stockpile perimeters must be contained with straw wattles, silt fence, gravel bag berms, or similar/equivalent controls.
9. Once a stockpile is removed, the disturbed area shall be returned to the original contours or final project finished grades, and permanently stabilized with vegetation or approved equal. Final restoration shall be done to the satisfaction of the Department.

2.1.3 Subdivision Grading Process

Rough lot grading for subdivisions may be included in the improvement plans reviewed by the Department without obtaining a separate grading permit through the Building Division of the Department of Planning and Building; however, the proposed rough grading will be subject to the same design and construction requirements as those imposed by the Department of Planning and Building. This activity will be referred to as the "Subdivision Grading Process," and the special requirements that will apply to the Department's review are discussed in this section. The Department will act as a deputy to the Building Official for the Subdivision Grading

Process. Typically, the precise grading and drainage permit is processed through the Department of Planning and Building.

Note that grading which is associated with a subdivision, but which occurs outside its boundaries, (such as borrow or disposal sites), may require a separate grading permit under the provisions of Title 19, 22, and 23 listed above, or per the requirements of the permitting agency if not the County. The Developer must provide a copy of the offsite grading permit or evidence from the permitting agency that one is not required.

Subdivision Grading Process submittals processed through the Department shall be routed through Planning and Building to ensure consistency with the following requirements:

- Code: Currently adopted California Building Code (CBC) including ADA access requirements.
- Ordinance: County Ordinance Titles 19, 22, and 23.

In addition to the requirements of Sections 2.1.1 and 2.1.2, the designer should use the following information as a "checklist" when preparing a plan submittal under these provisions:

A. Scope of Work. A written Scope of Work shall be included on the Title Sheet which lists all items of work included on any set of plans which include the Subdivision Grading Process.

B. Demolition Plan.

   1. Plans shall clearly show all trees proposed for removal and protection. Each tree shall be identified by type, trunk diameter, and status. A summary table of all trees to be removed shall be provided on the plan.

   2. Plans shall clearly show and label all existing site infrastructure proposed for removal and protection. The Department does not have permitting authority for the demolition of certain facilities, including wells and septic systems. A separate Demolition Permit may be required from the Department of Planning and Building, or the Environmental Health Services Division of the Department of Public Health. All necessary demolition permits must be secured prior to Department approval of the grading plan.

C. Grading & Drainage Design.

   1. Provide grading and drainage plans and reports as required per these Public Improvement Standards.

   2. Storm drains and subsurface basins shall be located such that future maintenance (including removal and replacement) of the facility shall not affect the structural stability of adjacent buildings.

   3. Any private drainage facilities that accept public storm water (runoff from public streets or roads) shall provide a public drainage easement which shall be shown and labeled on the plans and recorded on the final map.

   4. Drainage easements shall be shown and labeled on the plans and recorded on the final map, where any drainage infrastructure (basins, pipes, swales, channels, etc.) crosses onto or across adjacent lots within the subdivision. Blanket drainage easements may be proposed where appropriate.

5. Any rough pad grading shall be in compliance with these Public Improvement Standards and the Building Official requirements including compaction results, pad certification (suitable to support intended structure), and pad elevation certification.

D. Sedimentation Erosion Control Plan & SWPPP. Address erosion and sedimentation control and Stormwater Pollution Prevention Plan (SWPPP) per County of San Luis Obispo Stormwater Ordinances.

E. Stormwater Compliance. Show compliance with the County of San Luis Obispo Stormwater Ordinances (including the Central Coast Regional Water Quality Control Board Post-Construction Stormwater Requirements, Resolution No. R3-2013-0032)

F. Easements.

1. All proposed easements shall be shown and labeled on the plans and recorded on the final map.
2. Structures such as buildings, walls, trash enclosures, etc., shall not encroach within the proposed drainage or utility easements.
3. Minimum widths of all drainage easements shall be in accordance with these Public Improvement Standards.

G. Site Retaining Walls (when authorized by the Building Official).

1. Show location, extent, and nature of all proposed retaining walls.
2. Provide detail(s), key and reference on the plans and label property lines.
3. Provide spot elevations at the top and bottom of retaining walls.
4. Provide wall profiles.
5. Provide structural calculations for the retaining wall(s).
6. All walls shall be in compliance with the special inspection requirements in the currently adopted CBC.

2.2 Construction Specifications

2.2.1 Materials

A. Deleterious Materials. No vegetative matter, nor any other deleterious materials, shall be permitted within any area which will support any structure or roadway. No organic material shall be permitted in structural fills. If fill is specified to be a non-structural land reclamation, erosion control, or agricultural fill, organic material may be allowed.

B. Retaining Walls. If permitted, reinforced concrete, CMU, gravity, and block retaining walls and railings shall conform to Section 2.1.2, the CBC, and the State Standard Specifications.

2.2.2 Construction

A. Compaction Standards. The Project Engineer shall collect compaction data throughout construction and as required by the CBC. Following completion of the work, the Project Engineer shall provide compaction reports to the Department, certifying compliance with these requirements, for all the following areas:

1. Each graded lot pad.
2. All roadways (compaction tests in these areas shall comply with the State Standard Specifications).
3. All roadway shoulders (compaction tests in these areas shall comply with the State Standard Specifications).
4. All sidewalk areas, where applicable (compaction tests in these areas shall comply with the State Standard Specifications).

B. Elevation Certification. The Project Engineer shall collect elevation data for all graded lot pads. Following completion of the work, the Project Engineer shall provide elevation certifications to the Department prior to project completion, or building foundation pour, whichever occurs first.

C. Inspections.

1. The Developer shall be responsible for ensuring that all required inspections are requested and performed; the Project Engineer shall be responsible for the competency of all required inspections.
2. Special Inspections: The Project Engineer shall either (a) document that no Special Inspections are required, or (b) prepare a Statement of Special Inspections in accordance with CBC Chapter 17, Section 1704.
3. In Commercial Retail, Commercial Service, Office/Professional and Industrial land use categories, or other sites where determined necessary by the Department, an inspection shall be required prior to building foundation pour, to verify the relationship between building floor elevations and back-of-sidewalk elevations. If the street improvement design was prepared by the Department, this inspection shall be conducted by the

Department. If the street improvement design was prepared by the Project Engineer, the inspection shall be conducted by the Department and the Project Engineer.

D. Grading in Open Space Areas. No grading shall occur in any designated Open Space Area unless specifically permitted by the Department of Planning and Building.

E. Erosion Control During Construction. Follow-up applications of hydro-seeding shall be made as needed to cover weak spots and to maintain adequate soil protection. These applications shall avoid over-spray onto the traveled way, sidewalks, lined drainage channels, and existing vegetation. After any rainfall event, the Developer is responsible for maintaining all slopes to prevent erosion.

F. Retaining Walls Inspection. Inspections are required at several phases of wall construction.

1. Footings (prior to pour)
2. Walls:
   i. Masonry: Pre-grout/reinforcement steel (prior to grouting)
   ii. Reinforced concrete: Forms and reinforcement steel (prior to pouring)
3. Backfill/drainage (prior to backfill)
4. Final

Section 3. Roadways

3.1 Design Standards

3.1.1 Definitions

A. Complete Street. A Complete Street is a street designed and built to accommodate all users of the roadway including pedestrians, bicyclists, transit riders, as well as commercial and general motorists. A Complete Street is user friendly for all users regardless of age or ability. The County views all transportation improvements as opportunities to improve safety, access, and mobility for all travelers in California and recognizes bicycle, pedestrian, and transit modes as integral elements of the transportation system.

B. Gravel Road. A Gravel Road is one which serves Residential Rural, Rural Lands, and Agricultural land use categories, as those categories are shown by the Land Use Element of the General Plan. The Gravel Road standard may be approved by the Department for new or expanded roads when the following criteria are met:

1. Conforms to Fire Agency maximum slope requirements for Gravel Roads.
2. Number of lots to be ultimately served by the road is 20 or less.
3. When the projected Average Daily Traffic (ADT) will be 100 or less.
4. The roadway will not be needed for area wide circulation.
5. The roadway will be offered for dedication to the public.
6. A property owners' association is formed for the maintenance of the roadway.

C. Rural Road. A Rural Road is one which serves all properties outside Urban Reserve Lines, as defined in the Land Use Element of the General Plan. In addition, a road is considered Rural when it provides access to Residential Suburban, Residential Rural, Rural Lands, and Agricultural land use categories inside Urban Reserve Lines. There may be exceptions where a rural road standard is used within an Urban Reserve Line, depending on the character of the neighborhood.

D. Urban Street. An Urban Street is one which serves Residential Single Family and Residential Multiple Family land use categories inside Urban Reserve Lines, as well as Open Space and Recreational categories adjacent to those categories as shown in the Land Use Element of the General Plan.

E. Commercial/Industrial Road or Street. A Commercial/Industrial Road or Street is one which serves Commercial Retail, Commercial Service, Office/Professional, and Industrial land use categories within Urban Reserve Lines, as those categories are shown by the Land Use Element of the General Plan.

F. Arterial Road or Street. An Arterial Road or Street is one which is primarily for the purpose of carrying traffic between State Highways and population centers, or which is needed to serve large volumes of traffic within an urban area. As used in these Standards, the term

"Arterial" includes all those roads or streets designated Principal Arterial or Arterial in the Circulation Element of the General Plan.

G. Collector Road or Street. A Collector Road or Street is one which is or will be used primarily to enable traffic to move to and from Local roads or streets and Arterial roads or streets. As used in these Standards, the term "Collector" includes all those roads or streets designated Collector in the Circulation Element of the General Plan.

H. Local Road or Street. A Local Road or Street is one which is or will be used primarily for access to abutting property. As used in these Standards, the term "Local" includes all other roads not considered Arterial or Collector.

I. Speed. Speed for County roads shall be defined as follows:

1. Average Speed shall be the summation of the instantaneous or spot-measured speeds at a specific location of vehicles divided by the number of vehicles observed.
2. Design Speed shall be used to determine the various geometric design features of a roadway. Design speed shall be selected in accordance with these standards or as determined by the Department.
3. 85th-Percentile Speed is based upon measured field data and is the speed at or below which 85 percent of the motor vehicles travel.
4. Operating Speed is the speed at which a typical vehicle or the overall traffic operates. Operating speed might be defined with speed values such as the average, pace, or 85th-percentile speeds.
5. Pace is the 10-mph speed range representing the speeds of the largest percentage of vehicles in the traffic stream.
6. Posted Speed is the speed determined following an engineering and traffic survey (CVC 627) and established by County ordinance.
7. Prevailing Speed is the 85th percentile speed.
8. Running Speed is the average operating speed over a selected road segment. On a straight level road segment, the running speed will typically equal the prevailing speed throughout the road segment. On road segments with varying conditions such as a curving mountain road, the operating speed may vary at different points along the segment. The running speed is typically determined by the measuring average time to travel the full segment.

J. Roadway Structural Section Factor of Safety. High volume roadways with projected Average Daily Traffic (ADT) of 6,000 or greater shall be designed to include the Caltrans safety factors of 0.20-foot and 0.10-foot, for flexible pavement with a base layer and for full depth asphalt, respectively. The Empirical Method for calculation of the structural section is discussed in Topic 633 of the Highway Design Manual.

3.1.2 Design Criteria

In order to maintain consistency with the General Plan, the design of County roadway improvements must take into account the Street Design Considerations from Framework for Planning.

A. Design Speed. The selection of the design speed for a County road can have a dramatic effect on the design, cost, and maintenance of that road as well as the quality of life for the road users. The design speed shall be selected as follows:

1. For spot improvements on existing County roads such as driveways, sidewalks, trails and other similar improvements the design speed shall be the prevailing speed.
2. For new roads where speed data cannot be measured, or significantly altered roads where measured speeds are not relevant, the design speed shall be per Standard Drawing A-1, A-2, or A-3 as applicable.
3. For road segments with varying geometry the design speed shall be based upon the measured prevailing speed.
4. Other design speeds may be selected if approved by the Department per the design exception process.

B. Longitudinal Grade. The grade along the profile or flowline of any new roads or streets shall conform to the following:

1. The minimum longitudinal grade along the profile or flowline of new roads or streets constructed of Hot Mix Asphalt shall be 0.50-percent.
2. The minimum grade along the profile or flowline of new roads or streets constructed of portland cement concrete shall be 0.30-percent.
3. Vertical curves shall be used at grade breaks greater than 1.0-percent.
4. A minimum 50-feet tangent shall be required between sag-sag or crest-crest adjacent vertical curves.

C. Horizontal Alignment. Compound curves shall be avoided whenever possible. There shall be a minimum 50-feet separation between horizontal curves.

D. Cross Slope. The slope transverse to the profile or flowline of roads or streets shall conform to the following:

1. The standard cross-slope to be used for all new construction shall be 2.0-percent.
2. The minimum cross slope for widening any roads or streets shall be 1.0-percent, except for superelevated sections or approaches to cross gutters.
3. The maximum cross slope for widening any roads or streets shall be 5.0-percent, except for superelevated sections.
4. The cross slope on Gravel Roads and shoulders shall be between 4.0-percent and 5.0-percent.
5. Grade breaks in the cross slope shall be minimized where possible and shall in no case be greater than 1-percent (algebraic difference) within the traveled lanes nor more than 3-percent (algebraic difference) within the paved shoulders.

E. Intersecting Streets or Roads.

1. When two streets or roads intersect, neither shall have a grade greater than 3-percent for a minimum distance of 40-feet measured from the curb line of the intersected street or road to the beginning of the first vertical curve, except in unusually rough terrain, where the Department may allow up to a maximum of 5-percent.

2. Road or street intersections, or driveway approaches, shall be designed to conform to the sight distance requirements established in the A-5 series Standard Drawings.

3. Intersecting streets, roads and driveways shall meet at an angle of 90-degrees where possible. In no case shall this angle be less than 80-degrees.

F. Bikeways. Bikeways shall be incorporated into the design of any public improvements whenever a street or road that is to be improved is recommended for bikeway improvements by the County Bikeways Plan. Also see Board of Supervisors Resolution 2008-152.

1. Where Class I or Class II bikeways are specified, those bikeway improvements shall be added to the street or road cross-section as otherwise determined above.

2. Where Class I bikeways are to be constructed within County-maintained road Right-of-Way, they shall be constructed of Portland Cement Concrete if they are to be maintained by the Department. If a Homeowners' Association or other mechanism is proposed for maintenance, other materials may be considered.

3. Where Class III bikeways are specified, the roadway travel lanes shall be at least 12-feet in width.

4. The design of bikeways shall conform to Chapter 1000 of the Highway Design Manual, and the recommendations of the County Bikeways Plan.

G. Cross Gutters. No cross gutters will be allowed across any road or street with a 20-year forecast traffic volume greater than 3,000 ADT.

H. Curve Data. The computed curve data for all centerline curves shall be shown on the plans. The minimum radius of the property line on the exterior corner of all corner lots shall be 20-feet. The minimum radius of curb returns shall be 30-feet. Larger radii may be required when specified in project conditions of approval, in commercial and industrial areas, or as required by the Department.

I. Obstructions at Public Road Intersections and Knuckles. No signs, hedges, shrubbery, vegetation, fence or other sight distance obstruction shall be placed within the restricted area at the corner of any public road intersection, or inside curve of any knuckle. An obstruction is anything higher than 2.5-feet above either the nearest pavement surface or the nearest traveled way (where there is no pavement). The dimensions of the restricted area are provided in the Standard Drawings.

J. Right-of-Way. Right-of-Way easement shall be offered for dedication to the public, as necessary to contain all elements of the roadway prism. Pedestrian easements will be required when sidewalks, curb ramps, or driveway walk-arounds extend beyond the existing Right-of-Way. Slope easements may be required when roadway cuts and fills extend beyond the existing or proposed Right-of-Way.

K. Street and Road Profiles. The plans shall clearly show the existing and proposed profiles of all roadways. Road profiles must include existing slopes, proposed slopes, vertical curve information with elevations at 25-feet minimum intervals, and elevations at all horizontal and vertical points of deviation. The design may be required to include the future extension of the street or road profile for a distance of 200-feet beyond the project limits, depicting both existing and future design grades.

L. Mid-Block Tapers. Tapers shall be provided at each end of a segment of road widening and shall be located beyond the end of the development site. Tapers which affect the width or lateral placement of travel lanes shall be designed as follows:

1. For roads having a prevailing speed of 45 mph or greater, the formula: $L = WS$ shall be used to compute the transition taper length.
2. For roads having a prevailing speed less than 45 mph, the formula: $L = WS^2/60$ shall be used to compute the taper length.

   Where:

   L = the taper length in feet,
   W = the width of the offset distance in feet, and
   S = the prevailing speed.

All other tapers including shoulders, parking lands, and bike lanes shall be designed at a minimum ratio of 5 (longitudinal): 1 (lateral).

M. Intersection Tapers. When new public road intersections are constructed, intersection tapers shall be provided according to the following table:

Intersection Taper Requirements

Urban/Rural	Main Road	Intersecting with	Taper Requirement
Rural	Arterial	Arterial	Highway Design Manual (HDM) Figure 405.7*
	Arterial	Collector	HDM 405.7*
	Arterial	Local	HDM 405.7*
	Collector	Collector	HDM 405.7*
	Collector	Local	30 ft. radius return
	Local	Local	30 ft. radius return
Urban	Arterial	Arterial	30 ft. radius curb return
	Arterial	Collector	30 ft. radius curb return
	Arterial	Local	30 ft. radius curb return
	Collector	Collector	30 ft. radius curb return

Urban/Rural	Main Road	Intersecting with	Taper Requirement
	Collector	Local	30 ft. radius curb return
	Local	Local	30 ft. radius curb return

* Design vehicle: Bus

Increased taper requirements (corner radius, length of approach widening) may be required to achieve adequate turning room where bike lanes, parking lanes, or shoulders are not provided, see "Turning Design" below. Increased requirements may also be applied in the permit conditions of approval, depending on project operational requirements.

N. Turning Design. Road and driveway intersections shall be designed to accommodate the minimum turning radius of commonly anticipated vehicles.

Road Type	Turning Requirement
ARTERIALS COLLECTORS COMMERCIAL ZONE INDUSTRIAL ZONE	California Legal Vehicle 50-foot radius PER HDM Figure 404.5C
RURAL ROADS	California Legal Vehicle 50-foot radius per HDM Figure 404.5C (Vehicle turning path may include the opposing lane on roads with ADT less than 1,000)
RESIDENTIAL (URBAN)	40-Foot Bus Design Vehicle radius per HDM Figure 404.5E (Vehicle turning path may include the opposing lane on roads with ADT less than 1,000)

O. Cut and Fill Slopes within the County Right-of-Way. Side slopes along the roadway that are laid back (flatter slopes) tend to provide an improved appearance, reduced erosion and maintenance, increased safety, and overall better public usability. Therefore, where practical, slopes should be 5:1 or flatter within the Right-of-Way. Where flatter side slopes are not practical, the following minimums shall apply:

1. 4:1 minimum for a minimum distance of 15-feet from the edge of traveled way on roads with an estimated ADT of 5,000 or greater at build out.
2. 3:1 minimum on sandy soils on roads with an estimated ADT less than 5,000 at build out.
3. 2:1 minimum on roads with an estimated ADT less than 5,000 at build out.

4. The Department may approve (via the design exception process, Section 1.2) steeper slopes when the following conditions are demonstrated:
   i. The proposed slopes have been determined to be geotechnically stable.
   ii. The lateral clearances are maintained.
   iii. Adequate erosion control can be established.
   iv. Adequate access for maintenance is provided.
   v. Adequate sight distance is provided.
   vi. Adequate setback is provided from adjoining properties or adjoining facilities.
5. The Department may approve steeper slopes for road maintenance or reconstruction projects requiring rock slope protection due to constrained site conditions (e.g. slopes adjacent to water courses, wetlands, environmentally sensitive areas, or other conditions), when in substantial conformance with Standard Drawing R-5.

P. Barricades. Where improvements only cover a portion of the ultimate improvement and where an improved street is proposed to be extended in the future, the improvements shall include a barricade at the end of surfacing of such a street to serve as a warning to the public. The barricade shall be constructed, erected, painted and signed as depicted in Standard Drawing M-2. The barricade shown in Standard Drawing M-2a may be used if the road is to be extended in less than five (5) years.

Q. Raised Medians. Raised medians shall not be proposed on County maintained roads without prior approval from the Department. Where raised medians are approved, the medians shall conform to the following requirements:

1. Design. The raised median design shall follow the Highway Design Manual.
2. Width. No portion of the median shall be less than 4-feet in width. Any portion of the median less than 8-feet in width shall be surfaced with stamped concrete or similar approved treatment. A 2-feet paved shoulder shall be provided on the roadway surface adjacent to the median curb and the traveled way.
3. Markings and Signage. Retroreflective curb and pavement markings and median signage shall be provided in accordance with the CAMUTCD.
4. Luminaires (Lighting). Overhead lighting, if required by the Department, shall be designed to provide a minimum illumination on the median and adjacent road surface per 4.1.9.H.
5. Landscaping. As an alternative to stamped concrete, a median landscape and irrigation plan may be provided to the Department for review. Proposed landscaping shall provide for intersection and driveway sight distance requirements as required by the Highway Design Manual and these Standards. Median landscaping shall require an encroachment permit issued by the Department to the fronting property owner/s or recognized community organization, identifying ongoing maintenance responsibilities.

R. Knuckles. A knuckle may be used, in lieu of the appropriate horizontal curve, in the design of Urban Streets with an ADT less than 500 and design speed of 25 mph or less, or on Commercial/Industrial streets whenever required to make a 90-degree bend. Knuckle

designs shall conform to the requirements of Standard Drawing A-6b. The use of knuckles in rural areas is discouraged. Subdivisions in these land use categories should use horizontal curves appropriate for the required design speed.

S. Left-Turn Channelization. The need for provision of left-turn channelization shall be determined by use of NCHRP graphs or AASHTO warrant table. Left-turn lanes must also be considered when turn volumes exceed 100-vehicles per hour, and when there is a history of collisions. The length of the channelization shall be the minimum storage plus deceleration length as determined from Highway Design Manual, unless a greater length is warranted. A 20 mph speed reduction may be used in determining the required length of deceleration with prior approval by the Department.

T. Right-Turn Channelization. Right-turn channelization shall be provided wherever forecast right-turning traffic volume will be 100-vehicles per hour, or as required by the Department. Right-turn lanes must also be considered when there is a history of rear-end collisions. The layout of the channelization shall be based on Highway Design Manual, with deceleration length included, unless a greater length is warranted. A 20 mph speed reduction may be used in determining the required length of deceleration with prior approval by the Department.

U. Rumble Strips. Rumble Strips are pavement grooves that alert drivers that they are drifting out of the travel lane. They are effective in shoulders for reducing the number of run off road collisions as well as on centerlines for reduction of head-on collisions. While it is believed rumble strips are particularly effective in alerting drowsy or fatigued drivers, research suggest that rumble strips are effective in alerting other types of driver behavior as well.

1. Evaluation of Roadways for Rumble Strip Placement: The use of rumble strips shall be where directed by the Department based on specific location, road type, and collision history. Rumble strips may be considered in the following situations:

   i. On Rural Roads where the prevailing speed is 45 mph or greater.

   ii. Where shoulder widths accommodate bicycle traffic.

   iii. On new roads or overlay projects for roads with an ADT above 1,000.

   iv. As potential spot safety improvements on roadways with a history of high collision rates.

   v. Centerline rumble strip may be considered for roads with marked centerlines, with patterns of head-on collisions, or alignments which suggest higher incidence of head-on collisions.

2. Design of Rumble Strips - Right Edge: Rumble Strips should be designed in accordance with the most recent details of the State Standard Specifications; however, in limited shoulder conditions, rumble strips with 6-inch width on or adjacent to an edge line may be allowed.

   Rumble Strips shall not be installed though intersections, within 50-feet of an intersection, high volume driveway, agricultural driveway, or commercial driveway. Rumble strips shall

be installed with a detail 27B or 39 painted edge line but shall not be installed next to a striping detail 27C or 39A painted edge line or where there is a break in the edge line.

A minimum of 4-feet of paved shoulder shall be provided beyond the rumble strip on designated bike routes and a minimum of 2-feet shall be provided on all other roads.

3. Design of Rumble Strips - Left Edge (centerline or median): Rumble Strips shall be designed in accordance with the most recent details of the State Standard Specifications.

   Rumble strips shall be installed with a striping detail 22, 25A or 29 edge line but shall not be used with two-way left turn lanes. Rumble Strips shall not be installed through intersections or where there is a break in the edge line due to a high volume driveway.

3.2 Construction Specifications

3.2.1 Construction and Materials

Roadway work shall conform to the applicable provisions of the State Standard Specifications and these Standards.

The roadway shall be prepared and constructed in accordance with the applicable portions of the State Standard Specifications, unless otherwise modified in the following or approved by the Department. The construction shall incorporate the minimum Traffic Index as provided by the Department.

The roadway structural section shall be determined based on a forecast traffic volume and Traffic Index (TI), provided by the Department, and the R-value of the subgrade, which shall be provided by the Project Engineer. In no case shall it be less than 2-inches Hot Mix Asphalt over 6-inches Class 2 aggregate base.

A. Class 2 Aggregate Base. Class 2 base shall conform to the provisions of the State Standard Specifications. No additional testing, other than that specified (Gradation Limits, R-Value, Sand Equivalent, and Durability Index), shall be required. The following additional requirements apply to the placement of all aggregate bases:

   1. The Department shall be notified no less than 24-hours prior to placement of aggregate base materials.
   2. The Department shall reject any improvements based on materials not in compliance with these Specifications. If rejected, this may require the removal and replacement of the material just installed.
   3. The Department may require the installation of a top layer of crushed red rock to aid in protecting aggregate base shoulders from erosion.

B. Alternate Base. Alternate base such as Class 3 base, decomposed granite (DG), red rock, recycled or similar materials shall be approved by the Department prior to use.

C. Recycled Aggregate Base. The County encourages the use of recycled or reclaimed materials for new construction projects, provided they comply with these Construction Specifications. The following items apply to the use of recycled or reclaimed aggregate base:

1. The restriction in the State Standard Specifications, that the amount of recycled/reclaimed material included in Class 2 aggregate base not exceed 50-percent of the total volume of the aggregate used, shall not apply.
2. The testing requirements of the State Standard Specifications require recycled/reclaimed material to be tested at the source and at the job site.
3. The Project Engineer, Developer, and Contractor shall show due diligence to ensure that recycled/reclaimed aggregate base material meets the quality requirements of State Standard Specifications and be free of organic, metal, and other deleterious materials prior to placement. The Department shall be notified prior to any use of recycled base.

D. Hot Mix Asphalt. Use of Hot Mix Asphalt (HMA) shall conform to the requirements for HMA Type A as specified in State Standard Specifications utilizing the 3/4-inch maximum aggregate on new roads with a 20-year projected ADT of 1,500 or greater, and 1/2-inch maximum aggregate on all other roads. Asphalt binder shall conform to PG 64-10 as specified in the State Standard Specifications.

E. Interlocking Concrete Pavers. The Department will allow the use of interlocking concrete pavers on low speed, low volume Urban Streets as an aesthetic alternative to asphalt paved surfaces. Use of pavers on sidewalks will be considered on a case-by-case basis. The following design considerations must be addressed for using interlocking concrete pavers on a County maintained street:

1. Design and construction shall conform with the requirements and recommendations published by the *Interlocking Concrete Pavement Institute* (https://www.icpi.org/), or equivalent.
2. Concrete Pavers may only be used on Urban Streets in residential and central business district zones having a maximum speed limit of 35 mph and a maximum projected Average Daily Trip (ADT) of 1,000.
3. Use of Concrete Pavers may require that a Design Exception (Section 1.2) be submitted by the Engineer and approved by the Department. The Design Exception should be accompanied by written support from the Department of Planning and Building and the local community advisory committee.

F. Chip Seal. When Chip Seal is allowed by the Department, it shall conform to the following requirements:

1. Chip Seal shall consist of a fine seal coat followed by a fog seal in accordance with the provisions of the State Standard Specifications. The Department may require the pre-coating of screenings with emulsion. The Department may also permit the elimination of a fog seal.

2. Asphaltic emulsion used for seal coat shall be PMCRS2 conforming to the State Standard Specifications. The Department may require the use of PMCRS2H "hard-setting" emulsion, or the use of an alternative rejuvenating agent, such as PASS© or Styraflex©.
3. Asphaltic emulsion used for fog seal shall be CSS1h and conform to the provisions of the State Standard Specifications.
4. The rates of application for screenings and asphaltic emulsions shall conform to the State Standard Specifications. In order to minimize raveling, the following application rates are recommended:

   Aggregate screening spread rate = 21 - 22 lbs./sq. yd
   Chip seal emulsion application rate = 0.29 gal/sq. yd
   Fog seal application rate = 0.22 gal/sq. yd

   Proposed screenings and emulsion application rates shall be reviewed and approved by the Department prior to construction.
5. The approximate rate of application of the asphaltic emulsion shall be as directed by the Project Engineer and approved by the Department. The temperature at the time of application shall not be less than that which is necessary for proper operation of the oil distribution system.
6. Material Quality – Screenings shall meet the cleanliness requirements of the State Standard Specifications. Out of specification aggregates may be rejected by the Department.
7. Sweeping shall be required in the event the surface oil application (CSS-1h) is not placed within a suitable time after the screenings have been placed and traffic has disrupted their original distribution. Sweeping shall be repeated 2- days after the application and again as required by the Department.
8. The contractor shall have a standby vehicle containing rock chip screenings available at all times for repairing the surface of the seal coat at locations where it is damaged by traffic before it sets up, and/or at locations where full width coverage of the existing roadway surface has not been obtained to the satisfaction of the Project Engineer.
9. In addition to the requirements of the State Standard Specifications, the contractor shall temporarily cover any existing utility manhole covers, valve box covers, survey monument vault covers, and other existing highway facilities to prevent the adherence of any seal coat materials.
10. The contractor, pursuant to Section 22651-M of the California Vehicle Code, shall be responsible for notifying and making arrangements with owners of vehicles parked within the work area, for removal of those vehicles. Notification and posting of signs shall be made a minimum of 24-hours in advance of beginning the work. The contractor shall be responsible for posting and marking on the signs the day the work is scheduled.
11. All excess chips shall be removed within four (4) days, in accordance with the provisions of the State Standard Specifications.

G. Survey Monuments. Survey monuments shall be provided at the following locations within a public improvement:

1. In making a survey, the surveyor shall set permanent monuments at all angle points and curve points on the exterior boundaries of the parcel or tract map and at all parcel corners. Permanent monuments shall be set at angle and curve points on the centerline of on-site streets so that each monument will be visible with at least two other monuments and shall be set at the point of intersection of all on-site streets, and at their intersections with existing streets. In the Rural Lands and Agriculture land use categories, centerline street monuments at curve points may be omitted, provided Right-of-Way monuments are installed at curve points.

2. Any monument as required by Title 21 of the County Code, which is disturbed or destroyed before acceptance of all improvements shall be replaced by the Developer and a corner record shall be filed with the County Surveyor.

3. All monuments shall be subject to the inspections and approval of the County Surveyor before approval of any related subdivision map. In case the street improvement work in the subdivision is proposed to be installed subsequent to the recordation of the map, the County Surveyor may enter into a Monumentation Agreement with the subdivider and authorize posting of security in accordance with the Subdivision Map Act, to assure installation of the monuments required by this section which cannot be permanently placed until completion of the improvement work.

4. Monuments located in streets or roads shall be installed in conformance with the requirements of Standard Drawings M-1 and M-1a.

H. Planting Cut and Fill Slopes. Cut and fill slopes shall be planted as required by the Department. An erosion control plan shall be submitted when improvement plans are required. The erosion control plan shall include the County's standard erosion control notes and be approved by the Department prior to any earthwork.

I. Sawcutting of Pavement. All sawcuts and resulting seam locations are subject to Department approval, and shall comply with the following requirements:

1. All sawcuts and resulting seam locations shall be parallel and/or perpendicular to the roadway direction of travel.

2. In all cases where an encroachment permit allows for the widening, connection, trenching, or removal and replacement of existing street or road, the existing pavement shall be sawcut along a clean line a minimum of 1-foot inside the existing edge. A greater area of existing pavement may be required to be sawcut and removed to ensure the new pavement seams are properly located so that any new paving joins to competent pavement.

3. Cut edges shall be vertical, with square corners, and shall be straight and neat in appearance.

4. Rotomilling/grinding may be utilized in place of sawcut when approved in advance of the work by the Department.

5. Pavement removal and repair shall conform to the requirements of the R series Standard Drawings.

J. Temporary Steel Plate Bridging. When backfilling operations of an excavation in the roadway, including bike lanes and parking lanes, whether transverse or longitudinal, cannot be properly completed within a work day, steel plate bridging with a non-skid surface and shoring may be required to preserve unobstructed traffic flow. In such cases, the following conditions shall apply:

1. Steel plates used for bridging must extend a minimum of 12-inches beyond the edges of the trench.
2. Steel plate bridging shall be installed to operate with minimum noise.
3. The trench shall be adequately shored to support the bridging and traffic loads.
4. Temporary paving with cold asphalt concrete shall be used to feather the edges of the plates, if plate installation by Method J.6.ii described below, is used.
5. Bridging shall be secured against displacement by using adjustable cleats, shims, or other devices.
6. Placement for prevailing speeds:
   i. Less than 40 mph: Approach plate(s) and ending plate (if longitudinal placement) shall be attached to the roadway by a minimum of two (2) dowels pre-drilled into the corners of the plate and drilled 2-inches into the pavement. Subsequent plates are to be butted and tack welded to each other. Fine graded asphalt concrete shall be compacted to form ramps, maximum slope 8.5-percent with a minimum 12-inch taper to cover all edges of the steel plates. When steel plates are removed, the dowel holes in the pavement shall be backfilled with either graded fines of asphalt concrete mix, concrete slurry, epoxy or as directed by the Department.
   ii. 40 mph and above: The pavement shall be cold planed to a depth equal to the thickness of the plate and to a width and length equal to the dimensions of the plate. Approach plate(s) and ending plate (if longitudinal placement) shall be attached to the roadway by a minimum of two (2) dowels pre-drilled into the corners of the plate and drilled 2-inches into the pavement. Subsequent plates are to be butted and tack welded to each other.
7. The contractor shall inspect and maintain the steel plates, shoring, asphalt concrete ramps, and ensure compliance with these minimum specifications. The following table shows the advisory minimum thickness of steel plate bridging required for a given trench width (A-36 grade steel, designed for HS20-44 truck loading per Caltrans Bridge Design Specifications Manual).

Trench Width	Minimum Plate Thickness
10-in	1/2-in
1-ft-11-in	3/4-in
2-ft-7-in	7/8-in
3-ft-5-in	1-in
5-ft-3-in	1 3/4-in
Over 5-ft-3-in	Special Design Required

8. Steel plates subject to bicycle, auto, or pedestrian travel shall be nonskid and shall have a surface that was manufactured with a nominal coefficient of friction (COF) of 0.35 as determined by California Test Method 342.
9. A Rough Road sign (W8-8) with black lettering on an orange background may be required by the Department.

3.2.2 Testing

A. Basement Soil. Resistance factor "R" (State Stabilometer method) tests shall be made by the Project Engineer as required by the Department. The location of the tests within the area shall be selected so that an average "R" value may be determined for the entire development area. If the average "R" value is rejected by the Department then use of the lowest "R" value may be required.

"R" value tests may be required prior to approval of construction plans in cases where a road is anticipated to have very high forecast traffic volumes and traffic index, and/or known poor quality basement soil.

Relative compaction tests shall be made by an appropriately licensed professional on subgrade material, and material placed within the street areas of the development, as required by the Department. Said tests will be made prior to placing the next layer of material.

B. Aggregate Base. Tests for aggregate bases shall be made by the Developer as required by the Department on a minimum of two (2) representative samples taken at the source from which material will be imported. The sample shall be taken within 15-days prior to placement of either base or subbase. Test results submitted shall indicate clearly the location of the source of material. Base material shall also be subject to testing as it is delivered to the job site in accordance with State Standard Specifications.

C. Hot Mix Asphalt. Compaction testing of in-place Hot Mix Asphalt (HMA) shall be done using nuclear source equipment, and in accordance with California Test Method No. 375. Relative density shall be 95-percent or greater, based on average maximum density from the source, or from a sample taken at the project site at the time of placement. The following information shall be collected by the Project Engineer at the time of placement of HMA paving:

1. Asphalt content (for all projects with total tonnage >500 tons).

2. Compaction of HMA.
3. Temperature of HMA at time of placement.
4. Thickness of HMA and aggregate base.

D. Interlocking Concrete Pavers. Construction inspection and testing shall conform with the requirements and recommendations published by the *Interlocking Concrete Pavement Institute* (https://www.icpi.org/), or equivalent.

Section 4. Road Edges

4.1 Design Standards

4.1.1 Sight Distance

Sight distance shall be evaluated for public road intersections and driveways for both corner sight distance and stopping sight distance. The following criteria shall be considered for meeting sight distance requirements or steps required if sight distance is not met for a specific condition.

A. Public Road Intersections. Sight distance at all public road intersections shall comply with the "intersection" requirements of Standard Drawings A-5a, A-5b, and A-5c. The Department may require additional mitigations if sight distance is not met.

B. Driveways. Sight distance at all driveways entering onto public roads shall comply with the "driveway" requirements of Standard Drawings A-5a, A-5b, and A-5c. The Department may require additional mitigations if sight distance is not met.

C. Recommended Mitigations. Recommended mitigations may include regulatory/warning signage in accordance with CAMUTCD, vegetation clearing, and/or tree trimming to obtain vertical clear zone, grading of existing slopes, etc. The Department may approve proposed recommended mitigations or require additional mitigations as a condition of the encroachment permit.

		Corner Sight Distance (Standard Drawing A-5a)	
		MET	NOT MET
Stopping Sight Distance (Standard Drawing A-5b)	MET	Approved.	Approved with recommended mitigations.
	NOT MET	Not applicable.	Design Exception required with recommended mitigations.

4.1.2 Sidewalks

Concrete curbs, gutters and sidewalks shall be installed within urban areas as required by the Land Use Ordinance or Coastal Zone Land Use Ordinance. They may also be required in other areas if established as a condition of approval of a subdivision or land use permit.

A. Curb Ramps Required. Any installation of concrete curbs, gutters, and sidewalks fronting a property at a public road intersection shall include the installation of curb ramps which comply with the State Standard Specifications and as indicated in Standard Drawing C-5.

Existing curb ramps fronting the property that do not meet current State Standard Specifications shall be repaired or replaced as needed.

B. Attached and Detached Sidewalks. Where a sidewalk is to be constructed, it may be attached (i.e., integral with the curb) or detached (separated from the curb by a landscaped parkway), as approved by the Department. The required sidewalk dimensions are based on fronting land use category as shown in Standard Drawing C-4.

C. Bulb-Outs. Bulb-outs conforming to the Highway Design Manual and Standard Drawing A-6c or A-6d may be approved by the Department at intersections in urban area where curb, gutter and sidewalks are also provided.

D. Repair and Replacement of Sidewalks. Existing sidewalks fronting the property shall be repaired and/or replaced as determined by the following criteria:

1. ADA maximum allowable sidewalk vertical displacement = 1/4-inch.
   i. Vertical displacement of 3/4-inch or less – grind panel to provide smooth transition.
   ii. Vertical displacement greater than 3/4-inch – remove and replace panel.
   iii. Divots deeper than 1/2-inch and wider than 1/2-inch to 3/4-inch – use appropriate patch filler.
2. ADA maximum allowable sidewalk horizontal displacement = 1/2-inch.
   i. Horizontal displacement of 1/2-inch to 3/4-inch – use appropriate patch filler.
   ii. Horizontal displacement greater than 3/4-inch – remove and replace 5-feet panel.
3. Misalignment of curb face of 3/4-inch or greater – remove and replace section.
4. Gutters subject to standing water 1/2-inch deep or greater and for a distance of 5-feet or more – remove and replace section.

4.1.3 Multi-Use Paths

Multi-use paths are unpaved multipurpose facilities suitable for serving a combination of recreational hikers, pedestrians, equestrians, off-road bicyclists, and other non-motorized vehicle users. Multi-use paths outside of the County Right-of-Way shall be designed in accordance with the requirements of the Department of Parks and Recreation, Department of Planning and Building, or other applicable jurisdiction. Multi-use paths within the County Right-of-Way shall be designed and constructed in accordance with these standards:

A. ADA Compliant. Multi-use paths shall meet all of the ADA requirements for pedestrian paths including those for surface, width, and grade unless a nearby ADA compliant alternate path is readily available.

B. Highway Design Manual (HDM) Compliant. Multi-use paths that are reasonably anticipated to convey bicycle traffic shall be designed either as a “Class I Bikeway” or as a “Trail” and shall comply with Chapter 1000 of the HDM.

C. Materials. Multi-use paths shall be constructed of a minimum 6-inches compacted angular decomposed granite, with a maximum aggregate size of 3/8-inch. Compacted sand may be used if it is confined either by the roadway or by an approved root barrier installed on both sides of the path to a minimum depth of 24-inches.

D. Attached and Detached Paths. Where a multi-use path is to be constructed, it may be attached (i.e., integral with the edge of the roadway pavement) or detached (separated from the roadway by a landscaped parkway). Detached paths must be used when the design speed for the adjacent roadway is 45 mph or greater and shall be a minimum of 10-feet from the edge of traveled way. Dimensions for attached and detached paths are provided in Standard Drawings A-1a (rural) and A-2a (urban).

E. Crossing Locations. Multi-use paths which cross public streets or roads must cross only at intersections with the appropriate signage, pavement marking, lighting, and warning devices as required by the Department.

4.1.4 Pedestrian Crossings

As noted in the California Vehicle Code, crosswalks, either marked or unmarked, exist at all intersections of streets unless the local authority has adopted regulations to restrict the crossing of pedestrian traffic. Marking of crosswalks, however, shall be done only after an engineering study is performed and has determined if marked crosswalks are appropriate at a location that is not controlled by traffic signals, yield signs, or stop signs. In addition, proper signage, warning devices, ADA compliance, and lighting may need to be installed to support the marked crosswalk. The study will evaluate pedestrian demand, collision history, traffic volumes, site geometry, sight distance, and visibility conditions at night.

New crosswalk markings and modification of existing crosswalk markings shall only be installed following approval by the Department. The following guidelines shall be used when determining the marking of crosswalks and making intersection improvements:

A. Installation of Marked Crosswalks on Uncontrolled Approaches of an Intersection. Installations are based on standards from the Caltrans Traffic Manual, the Manual of Uniform Traffic Control Devices, and Federal Highway Administration criteria. It is recommended that a minimum of 20 pedestrians per peak hour (or 15 or more elderly and/or child pedestrians) exist at a location before placing a high priority on the installation of a marked crosswalk.

B. High Speed Roads. Crosswalks shall not typically be marked on roads with prevailing speeds of 40 mph and above. Where approved, these crossings will require additional signage or other improvements.

C. Installation of Marked Crosswalks Between Intersections (Midblock). A midblock marked crosswalk may be approved by the Department if it meets all the following criteria:

1. The crossing location is greater than 600-feet from the nearest intersection on a through highway; and

2. There is a reasonable demand (40 pedestrians per hour) by pedestrians, as demonstrated by a survey of the street within the concentrated area; and

3. The crossing is more than 300-feet from the nearest signal or stop-controlled intersection; and
4. There is a high pedestrian volume generator nearby.

D. Re-Installation of Marked Crosswalks Covered by Roadway Surfacing. The re-installation of marked crosswalks shall be evaluated as part of all roadway resurfacing projects that cover pavement markings (chip seal or overlay). All marked crosswalks that do not meet the criteria in this policy shall be removed.

The California Vehicle Code, Section 21950.5, requires a public hearing 30-days prior to the removal of a crosswalk. Any crosswalk scheduled for removal shall be posted at the site 10-days prior to the scheduled hearing before the Board of Supervisors. The public hearing process shall be initiated by the Department.

E. Marked Crosswalks at Traffic Signal Locations. Marked crosswalks shall be designated across all approaches of a signalized intersection, unless individual approaches have had pedestrian traffic prohibited.

F. School Crosswalks. School Crosswalks shall be established based on adopted "safe routes to school" maps developed by the Department and the individual school principal or site committee and reviewed by the California Highway Patrol.

G. Sign-Mounted Warning Light Systems for Crosswalks. The installation of sign-mounted warning light systems, which incorporate flashing systems based on pedestrian demand, may be warranted if all the following criteria are met:

1. At least 40 pedestrians regularly use the crossing during each of any 2-hours (not necessarily consecutive) during a 24-hour period; and
2. The vehicular volume through the crossing exceeds 200 vehicles per hour in urban areas; and
3. The 85th percentile approach speed is 45 mph or less; and
4. The roadway has more than two (2) lanes but not more than five (5) lanes in both directions; and
5. The crosswalk is not controlled by a traffic signal, stop, or yield sign.

In certain cases, the Department may determine that a warning system is warranted due to the specific needs of visibility of school zone crosswalks or central business districts.

The Department may also elect to use sign-mounted warning light systems for existing uncontrolled crosswalks on collectors or arterials with a minimum of 20 pedestrians per hour for any 2-hours (not necessarily consecutive) during a 24-hour period.

H. Illumination of Crosswalks. Within urban reserve lines, all new intersections and crossings (either marked or unmarked crosswalks), on streets with buildout traffic over 5,000 ADT shall have the level of illumination as defined in Section 4.1.9.H of these Standards. Lighting standards shall conform to State Standard Specifications or the applicable Community Design Plan.

If the new crosswalk installation, either marked or unmarked, is created through land development, the Developer shall arrange for the installation, maintenance and ongoing operation of the street light. Operation and maintenance shall be paid for either through an existing lighting district, community services district, or property owners association for the development.

I. Crosswalk Dimensions and Markings. All marked crosswalks shall conform to the State Standard Specifications and CAMUTCD. The Department may require the use of "ladder" or "zebra" style crosswalks. The curb ramp treatments at both ends of a marked crosswalk must be brought into compliance with current State Standard Specifications at the time the crosswalk is marked.

4.1.5 Driveways

A. Sight Distance. All driveways, at the point where they connect with any County maintained roadway shall conform to the sight distance requirements of the A-5 series standard drawings. Additional grading of slopes or height restriction of fencing, signs, or landscaping may be needed to meet this requirement.

B. Rural Road Driveways. All driveways in rural areas must conform to the requirements of the B-1 series standard drawings. The specific type of driveway shall be determined by the Department at the time of issuance of an encroachment permit or prior to improvement plan approval. No more than two (2) driveways may serve a single property, and the width of all driveways should not exceed 60-percent of the property frontage. In no case shall a driveway be closer than 50-feet from nearest street intersection as measured from the centerline of the driveway to the nearest traveled way of the intersecting street.

C. Urban Street Driveways. All residential driveways in urban areas must conform to the requirements of the B-2 series standard drawings. All commercial driveways must conform to the requirements of B-3 series drawings, and specific type of driveway shall be determined by the Department at the time of issuance of an encroachment permit or prior to improvement plan approval. No more than two (2) driveways may serve a single property and the width of all driveways should not exceed 60-percent of the property frontage. In no case shall a driveway be closer than 50-feet from nearest street intersection as measured from the centerline of the driveway to the nearest traveled way of the intersecting street.

D. Driveways on Arterials and Collectors. Driveways on arterials and collectors must conform to the following requirements:

1. Where possible, driveways must be located on cross streets or roads.
2. Only one driveway per parcel will be permitted; shared driveways between parcels are encouraged.
3. Driveways must be located no closer than 200 feet to the adjacent intersection.
4. The distance between driveways shall not be less than 200 feet.
5. Driveways may only be served by a break in a center median when such a break is not detrimental to the traffic flow.

6. In new subdivisions, residential driveways shall not be permitted; properties must take access from local roads.

E. Single Driveways Serving Multiple Units. The driveway apron width shall match the width of the interior access road.

4.1.6 Angled Parking

A. Planning Elements. Angled parking may be designated on private property as provided for in the Land Use Ordinance or Coastal Zone Land Use Ordinance. With Department approval, angled parking within public improvements shall only be located in the following:

1. Central business district areas which qualify as a business district under the California Vehicle Code, Section 235. Said business district will need to have a defined boundary as established by a gateway feature, such as a monument, roadside bulbout treatments or other type of roadside element to define the downtown.
2. Significant public areas, such as a park, which are not located on defined arterial and collector roadways.
3. Potential major traffic generators which are not located on defined arterial and collector roadways.

The Department may approve alternate locations on a case-by-case basis.

B. Design Criteria. The following design criteria shall be adhered to in proposing angled parking:

1. Stall angle layout should be 45 degrees.
2. The Right-of-Way required to provide angled parking should be a minimum of 90-feet. The minimum paved width shall be 32-feet from centerline.
3. Parking stalls shall conform to current ADA requirements (five (5) disabled person stalls per 100 stalls).
4. The block to be considered for angled parking shall have either no driveways, or a minimum number of driveways, such that there is a distinct two-to-one advantage in placing angled parking over parallel parking.
5. All layouts at intersections, driveways, and parking stalls shall accommodate a minimum stopping sight distance for 25 mph.
6. Angled parking shall not be allowed for one block, in either direction, of a signalized intersection.

C. Implementation Criteria.

1. Marked parking spaces between two (2) intersections shall be either all angled parking spaces or all parallel spaces.
2. A defined walkway, at least 6-feet wide, must exist between the back of the sidewalk and the face of the curb adjacent to an angled parking lane, to provide a 4-feet minimum clear path of travel for pedestrian traffic.

3. If a Developer proposes angled parking in front of a specific property, additional pavement widening shall be constructed to enable implementation of angled parking for the length of the entire block between two (2) intersections. At the time of request, the Developer shall provide the Department written verification from the adjacent property owners and the local community advisory committee verifying concurrence with the proposed angled parking.
4. The Board of Supervisors must amend the County's Traffic Regulations Code to allow angled parking spaces prior to construction of the road widening improvements.

4.1.7 Tree Trimming and Removal within the County Right-of-Way

A. Terms.

1. County Rights of Way
   a. Fee title – County owns the land on which the road is constructed.
   b. Easement – adjoining property owners own the land on which the road is constructed.
2. Tree Ownership
   a. Privately owned tree – any tree based in an easement type Right-of-Way.

B. Preservation of Existing Trees. Existing trees within the area of any roadway public improvements should be preserved where possible. All trees within or near the lateral clearance requirements shall be shown on the improvement plans. All trees to be removed or impacted shall be depicted on the improvement plans. The Department may require trees to be removed, or a guardrail to be installed to maximize safety or minimize maintenance.

C. Criteria for Tree Removal within County Rights-of-Way. A tree may be a candidate for removal based on the following:

1. Those that interfere with the safe operation of the road.
2. Those that pose a threat to the safety of the public or endanger County Facilities.
3. Those that are for the convenience of the property owner.
4. Those meeting any of the following conditions:
   a. Split trunk.
   b. Cracked main branches.
   c. Trunk leaning off the vertical by at least 15 degrees.
   d. Diseased or damaged trunk or main branches.
   e. Over half of main branches have been broken off, leaving skeleton or unsightly tree.
   f. Dead tree.

D. Responsibility for Trees within County Rights-of-Way.

Privately owned trees shall be maintained by the property owner. Where trees within the Right-of-Way jeopardize traffic, drainage, safety, or other critical services, the Department may act to keep the road facilities operational. In these situations, the property owner is responsible for all other work and liable for any damage and residue left after the County has made the roadway operational.

E. Procedures for Applying for Tree Removal within County Rights-of-Way. Privately owned trees within the Right-of-Way may be removed by the property owner at the property owner's expense subject to the following:

1. The property owner shall obtain an encroachment permit from the Department setting forth the conditions to be followed in the removal. Sections 1494 and 1495 of the Streets and Highways Code will be applicable.
2. Trees within the Coastal Zones shall also comply with County code Section 23.05.060, Tree Removal. A separate permit from County Planning and Building may be required.
3. Trees outside the Coastal Zones shall also comply with County code Section 22.56, Tree Preservation. A separate permit from County Planning and Building may be required.
4. In areas where a parkway tree planting requirement has been established by a property owners association, the permittee may be required to replace the tree, but it must be located outside of the Right-of-Way (e.g. in the front yard setback of the permittee's property).

F. Permitting. Property owners must secure an encroachment permit and hire a licensed, bonded, and insured tree company to maintain, trim, or remove trees within the County Right-of-Way at their own expense.

4.1.8 Trees and Landscaping within the County Right-of-Way

A. Tree Placement.

1. Where possible trees shall be located outside the County maintained Right-of-Way (e.g. behind the sidewalk or in the front yard setback of the permittee's property).
2. Trees within the Right-of-Way may be approved where an ongoing maintenance program is established and funded through a landscaping district, property owner's association, or by the fronting private property owner.
3. The eventual trunk size and branch height shall not impair sight distance on the roadway or driveways.
4. Trees must be planted with adequate lateral clearance from the road traveled way and from parking.

B. Tree Selection. The type of trees planted within the Right-of-Way shall be in accordance with Standard Drawing M-5c, or alternate, subject to approval by the Department. Appropriate trees shall have the following characteristics:

1. The selected tree and roots will have minimal impact on the curb, gutter, sidewalk, driveway, or other road facilities.
2. The tree leaves or debris load will have minimal impact on drainage facilities.
3. The tree type is known to be resistant to strong wind.
4. The tree type is known to have sturdy limbs that are not subject to sudden failure (i.e. widowmaker).
5. The tree type is appropriate for the soil and weather at the site.
6. The tree type will not require extensive irrigation.

C. Planting. Landscape (including plant selection) within the Right-of-Way is subject to approval by the Department.

1. Plant selection shall not impair sight distance within the roadway. This limits plant height near intersections and driveways to 30-inches.
2. Planting shall be located such that the full-size plant will not impair pedestrian access on sidewalks and pathways. Planting shall not inhibit the use of parking in parking lanes.
3. Plant selection shall have minimal debris loading on drainage facilities.
4. Wood bark, "gorilla hair," and other floating mulch shall not be used near drainage facilities.
5. Loose gravel and rocks shall not be placed adjacent to sidewalks or road pavement.

D. Low Impact Development (LID). Landscaping that complies with these standards and which is consistent with the County's Post Construction Requirement Handbook is encouraged.

4.1.9 Other Design Standards

A. Lateral Clearance.

1. Lateral Clearance – The minimum lateral clearance shall be provided as shown on the table below. Lateral clearance shall be measured from the edge of the traveled way to the edge of an un-yielding fixed object. Examples of unyielding fixed objects include but are not limited to: trees, utility poles, transformers or other above-ground facilities, sampling stations or other utility installations, or signs mounted on standards without "break-away" provisions. Examples of yielding fixed objects which may be permitted within the lateral clearance include landscaping other than trees and signs mounted on standards with "break-away" provisions.

Road Type		Lateral Clearance
Rural Road	35 MPH or more	10 Feet
	30 MPH or less	5 Feet
Urban Road	With Curbs	10 Feet
	Without Curbs	10 Feet
	Residential Zone without Curbs	5 Feet

2. Vertical Clearance – A minimum vertical clearance of not less than 15-feet shall be provided above the traveled way and shoulders and 8-feet above sidewalks. Other vertical clearance requirements apply for trails, sight distance, and County Cal Fire.

B. Preservation of Trees. Existing trees within the area of any roadway public improvements may be preserved where possible. All trees within or near the lateral clearance requirements shall be shown on the improvement plans. All trees to be removed or impacted shall be depicted on the improvement plans. The Department may require trees to be removed or a guardrail to be installed to maximize safety or minimize maintenance.

C. Railings and Barriers. Railings and barriers shall be placed as needed to address roadway safety conditions, accommodate pedestrian and bicycle traffic, and comply with ADA requirements and OSHA requirements. The Project Engineer shall evaluate the need to install such railings and barriers based on the following criteria:

1. Guard Rails. Guard railing shall be designed in accordance with the California Traffic Manual and State Standard Specifications. The Project Engineer shall consider the elimination of obstacles prior to proposing installation of guard railing as an appropriate solution.

2. Bikeways. Railings shall be installed on structures and along the pavement edge where embankment slopes drop off steeper than 2:1 within the lateral clearance requirement. Railings shall conform to AASHTO LRFD Bridge Design Specifications Section 13.9 "Bicycle Railings."

3. Pedestrian Railings. Railings shall be required when a sidewalk or multi-use path when a drop off that exceeds 30-inches in height is within 5-feet, and the slope exceeds 3:1. For locations along a sidewalk where the dropoff is greater than 6-inches but less than 30-inches, a 6-inch warning curb shall be installed along the edge in conformance with CBC.

4. Maintenance Work Surfaces. In any road Right-of-Way with retaining walls greater than 4-feet in height which is not subject to the bikeway or pedestrian requirements listed above, a railing system shall be provided pursuant to OSHA Standard 1926.501 “Duty to have fall protection” for the safety of maintenance workers. Railing systems shall be, at a minimum, a Cable Type railing as detailed in the State Standard Specifications.

D. Clearance Requirements for County Rights-of-Way. Clearance requirements for fronting properties on County road Right-of-Way were established by the Board of Supervisors in Resolution 2003-412. It shall be the responsibility of property owners to maintain sidewalks and multi-use paths fronting their property free from all encroachments.

E. Bus Turnouts. Where construction of a bus turnout is required by project conditions of approval, it shall conform to the requirements of Standard Drawing A-6e or A-6f.

F. Community Mailboxes. Community mailboxes shall not be located closer than 100-feet to the entrance to the community they serve. If the entrance street where they will be located will carry more than 1,000 forecast ADT, a turnout shall be provided utilizing the design standards for bus turnouts.

G. Hot Mix Asphalt Dikes. Dikes shall be used where needed for proper control of roadway drainage and shall comply with the requirements of Standard Drawing C-6. The type and placement shall conform to the requirements of Standard Drawing A-1 series or A-3a. Drainage inlets or overside drains shall be placed as needed to comply with the requirements concerning depth and spread of flow in Section 5. Hot Mix Asphalt dikes shall use PG 70-10 binder per the State Standard Specifications. With Department approval, Type A-dikes may be permitted in Urban areas to delineate pedestrian paths.

H. Luminaires (Streetlights). Where illumination of roadways, intersections, and medians is required by the Department, streetlights shall be designed and constructed per the Caltrans Traffic Manual, CAMUTCD, and State Standard Specifications. The minimum horizontal luminance should be as follows:

1. 1.6 horizontal lux[1] on the area normally bounded by the crosswalk.
2. 6.5 horizontal lux on the intersection of centerlines of the entering streets.

I. Parklets. Parklets within the County road Right-of-Way shall require an encroachment permit and are subject to review and approval by the Department. The design shall conform with Standard Drawing M-7 or shall be based upon guidance provided by National Association of City Transport Officials (NACTO). Parklets shall comply with sight distance requirement of A-5 Standard Drawing series at intersections. Additional requirements are as follows:

1. A 4-feet clear path of travel shall be maintained at all times.
2. Business owners are responsible for complying with applicable State/County public health guidelines and providing access per ADA requirements.
3. Businesses that serve alcoholic beverages shall obtain required permits and comply with requirements set by Alcoholic Beverage Control (ABC).
4. Business owners are responsible for sweeping the sidewalk and parklet surface that they occupy. This responsibility includes keeping the gutters clear of debris underneath and adjacent to each parklet.
5. Any proposal involving construction of more substantial vertical elements that would constitute a Temporary Structure as described in the California Fire Code (i.e. a wooden pergola or structural elements supporting equipment other than light-weight café lights or shade covers) shall be submitted for review and approval through the Planning and Building Department.
6. Placement of parklet is subject to Department review and approval.
7. Parklet may be subject to review and approval by Planning and Building, Environmental Health, County Fire, etc., as determined by the Department.

[1] 1 footcandle = 10.76391 lux

Section 5. Drainage & Flood Control

Drainage & Flood Control: These standards are intended to supplement the County's drainage and flood control ordinances, including the requirements of the National Flood Insurance Program and adopted community drainage studies. Drainage designs and improvements subject to these standards shall provide for proper flood control and for full access and travel during storm events.

Stormwater: Section 5 is not intended to address or conflict with the County's stormwater ordinances, including those that maximize opportunities for protecting stormwater quality and promoting groundwater recharge. Refer to "Stormwater Requirements for New Construction" located on Department website.

5.1 Design Standards

The design of proposed development sites shall handle waters generated by storms, springs, or other sources from both on-site and off-site impacts. Each improvement shall be designed so as to not alter the peak rate, concentration or location of historic flow patterns. There must not be damage to either the development site itself or any other land, either upstream or downstream. "Damage," as used here, is defined as water having sufficient depth or velocity to damage improvements or to deposit or scour soil. Where it is reasonable to do so, the design shall seek to improve adverse conditions that affect the site or adjacent lands.

Provisions shall be made in the design of a drainage system to ensure the system may be extended to serve and to properly handle the entire drainage area at the time of ultimate development. This is to include the entire upstream portion and the portion of the drainage watershed outside the development site, regardless of existing conditions.

The design standards contained herein are minimal and are intended to provide general guidance. Design details are the responsibility of the Project Engineer and must follow good engineering practice.

Drainage improvement designs must conform to the recommendations of the latest adopted community drainage studies referenced in the Introduction of this volume. (Cambria, Cayucos, Los Osos, Nipomo, Oceano, San Miguel, San Luis Obispo Creek Watershed Drainage Design Manual, Santa Margarita, and Templeton).

5.1.1 Hydrology

A. Rational Method. Hydraulic designs shall use the Rational Method, for areas not to exceed 200 acres. This method is discussed in the Federal Highway Administration (FHWA) Hydraulic Engineering Circular No. 22, Third Edition "Urban Drainage Design Manual."

B. Special Design Problems. For special design problems, or drainage areas in excess of 200 acres, the Project Engineer shall provide such reference information, as is necessary to confirm the hydraulic design being proposed. The design must conform to the Design

Approach laid out at the beginning of this Section. An acceptable method for determining storm runoff is the National Resource Conservation Service method.

C. Runoff Coefficients. Runoff coefficients for use in the Rational Method shall be determined using County Standard H-3 for developed areas, and H-3a for undeveloped areas.

D. Design storms. The following information shall be used for determining the appropriate design storm:

Determination of Design Storms

Type of Waterway	Watershed	Primary Design Storm[1]	Secondary Design Storm[2]
Major	>4 square miles (>2,560 acres)	100 years	N/A
Intermediate	1-4 square miles (640-2,560 acres)	50 years	100 years
Minor	<1 square mile (<640 acres)	25 years	50 years

1. All components of a drainage system must be designed to convey the runoff from the Primary Design Storm with freeboard.
2. All components of a drainage system must be able to convey the runoff from the Secondary Design Storm without freeboard; otherwise, alternate surface routes must be identified and provided with proper erosion protection and easement status.
3. Note that a given waterway may be classed as minor in its upper reaches, then change to intermediate at a point where the drainage area exceeds one square mile and change again to major where the drainage area exceeds four square miles.
4. Drainage calculations shall show that there will be no damage to properties under either the Primary or Secondary Design Storm.

5.1.2 Hydraulic Design Standards

A. Open Channels and Culverts. Manning's Formula shall be used to compute capacities of all open channels and culverts. The methods presented in FHWA Hydraulic Circular No. 5, "Hydraulic Design of Highway Culverts," may be used to evaluate culvert flow conditions.

The "n" values to be used in Manning's Formula shall conform to the values provided in Appendix D1.

B. Hydraulic Grade Line. While conveying the runoff from the Primary Design Storm, the hydraulic grade line shall be a minimum of 0.50-feet below the elevation of:

1. The top of the inlet grate or the bottom of the curb opening of catch basins, and
2. The manhole covers of storm drain manholes.

3. The hydraulic grade line at those structures shall be calculated by adding the following to the hydraulic grade line in the culvert main:
   i. The velocity head within the main culvert into which the inlet (and lateral, if any) discharges or which the manhole serves,
   ii. The head loss within said lateral, and
   iii. All the minor losses necessary to attain that velocity.

C. Downstream Constraints. Discharge leaving the site in the Primary and Secondary Design Storms shall not be greater than pre-development discharge in each case, unless it can be demonstrated that downstream facilities have adequate capacity.

D. Provide for Overland Escape. All components of drainage systems in public improvements shall be evaluated to consider the effect of failure of individual components and identify the route of overland escape. The evaluation shall identify any necessary measures to prevent erosion along this route.

E. Conveyance of Drainage in Urban Areas. Drainage shall be conveyed in surface facilities such as bioswales, street gutters, and cross-gutters to the maximum extent possible. Flows which cannot be conveyed within the capacity of these facilities shall be conveyed in culverts or storm drains.

F. Sidewalk Underdrains. No concentrated flows shall be permitted across the surface of any sidewalk. Inlets or sidewalk underdrains shall be used in such situations where needed and approved by the Department, and shall conform to D-4 series Standard Drawings.

5.1.3 Diversion of Drainage

A. Maintain Historic Path. Unless an individual project requires diversion of water to conform to a comprehensive drainage plan, water shall be received and discharged in substantially the same location and velocity which existed prior to development. Should diversion be required, sufficient work shall be done upstream and/or downstream to provide all affected properties at least the same level of flood protection as existed prior to the diversion.

B. Diversion Permitted Only Within Limits of Project. The diversion of natural watercourses will be allowed only within the limits of the proposed project. All natural drainage must leave the improved area at its original horizontal and vertical alignment and with approximately the same discharge velocity as existed prior to development, unless a special agreement indemnifying and approved by the County has been executed with the adjoining property owners.

C. Improvements in Natural Watercourses. Improvements in natural watercourses will not be approved unless the capacity of the improved waterway is at least that of the natural waterway.

D. Permits. No work shall be permitted in natural watercourses without the appropriate permits from State and Federal regulatory agencies (e.g., California Department of Fish and Wildlife,

U.S. Army Corps of Engineers, U.S. Fish and Wildlife Service, Central Coast Regional Water Quality Control Board, and others as required.)

5.1.4 Alignment of Drainage Facilities

A. Locate within Road or Public Easement. Drainage facilities accepting runoff from public roads, streets or other public areas shall be located in a public street or road or within a public drainage easement. These easements must be offered for dedication to the public before the improvement will be approved for construction.

B. Avoid Combining with Utility Easements. Drainage easements shall be used for drainage purposes exclusively and shall not be combined with easements required for other public utility purposes.

C. Easement Width. Easements for culverts and drainage facilities shall provide a minimum width of 10-feet. All such easements shall also provide access and future maintenance working areas. Whenever possible, easements shall be along or adjacent to property lines and outside of areas where structures are planned. On pipes of 24-inch diameter or greater, or trenches exceeding 5-feet in depth, the easement shall have additional width to provide ample future maintenance working area as required by the Department.

D. Storm Drain Alignment. Storm drain lines are to be parallel with the centerline of streets. The design shall avoid meandering, offsetting, and unnecessary angular changes. No angular changes greater than 10-degrees shall be made without a junction structure. No single change, even with a junction structure, shall exceed 90-degrees.

E. Cross Culvert Alignment. Cross culverts shall be aligned with the natural water course and might not be perpendicular to the roadway. The culvert shall be sized and mildly sloped to minimize downstream erosion.

F. Adjacent Property. Where a minor improvement of a drainage facility falls on adjacent property, a recorded easement from the adjacent property owners for such construction and a copy of the approval of the adjacent owners shall be submitted to the Department prior to approval of the improvement plans. Agreements between property owners shall hold the County harmless from any damage claim arising from said agreement.

5.1.5 Drainage Structures

A. Manholes. Standard precast concrete manholes shall be used wherever feasible. When cases arise where special manholes or junction boxes are required, the design shall be approved by the Department. All manholes shall conform to the following requirements:

1. Any pipes placed at a grade of 1-percent or flatter, shall have manholes provided every 200-feet. Pipes at a grade of greater than 1-percent shall follow the criteria in #2 and #3 below.

2. Manholes shall be located at junction points, changes in gradient and changes in pipe size. On curved pipes with radii of 200-feet to 400-feet, manholes shall be placed at the

BC or EC of the curve and on 300-foot maximum intervals along the curve for pipes of 24-inches and less in diameter, and 500-feet maximum intervals along the curve for pipes greater than 24-inches in diameter. Curves with radii less than 200-feet will be handled on an individual basis.

3. Spacing of manholes or inlets, of such size as to be enterable for maintenance, shall not exceed 500-feet along a tangent alignment for pipes 24-inches or less in diameter and 600-feet along a tangent alignment for pipes greater than 24-inches in diameter, except under special approved conditions. The spacing of manholes shall be nearly equal wherever possible.
4. All manholes shall have standard 24-inch diameter manhole covers. No manholes shall be allowed in roadway gutter or flowlines. Maintenance access points in roadway gutter or flowlines shall be standard drainage inlets with bicycle-proof grates.

B. Catch Basin. Catch basins shall be in accordance with the types shown on D-2 series Standard Drawings, or approved equivalent "precast" products, or other approved special inlets. Catch basins without a curb opening inlet shall not be used in urban areas. Refer to the State Standard Specifications for extended curb opening inlets. All inlets shall conform to the following requirements:

1. The capacity and spacing of drainage inlets shall be such that the spread of water in a Primary Design Storm does not inundate the traveled way (which includes all through lanes and center turning lanes but does not include bike lanes or right-turn-only lanes) as follows:
   i. For roads with design speeds less than 45 mph, the spread encroachment on the traveled way shall not be greater than 1/2 the outside through lane width.
   ii. For roads with design speeds greater than or equal to 45 mph, the spread shall not encroach on the traveled way at all. Any inundation shall be limited to the area outside the traveled way as defined above.
2. Where there is a potential for ponding at sag vertical curves (or other locations), pavement drainage shall be checked for a Secondary Design Storm. The spread encroachment shall comply with the requirements above.
3. Sufficient drainage capacity shall be provided within the road Right-of-Way and other drainage facilities to convey a 100-year storm without damage to any structures.
4. No more than 1.0 cubic feet per second (cfs) shall be allowed to "bypass" a midblock inlet. No more than 0.3 cfs shall be allowed to go around a curb return at an intersection.
5. Sheet flow across a road shall not exceed 0.1 cfs.
6. All "at-grade" grates shall be adequate for State of California HS-20 traffic loading and shall be "bicycle-proof".
7. Storm Drain Markers. All catch basins or inlets that have been installed, replaced, or modified and that convey storm water to a basin, creek, waterway or ocean shall have a storm drain marker installed per Standard Drawing M-6. Markers can be purchased from the Department.

C. Junction Boxes. Junction boxes shall be constructed of reinforced Portland cement concrete which complies with the compressive strength requirements provided in Appendix C or fabricated from reinforced concrete pipe sections where size limitations permit. All junction boxes shall conform to the following requirements:

1. Minimum wall thickness for poured-in-place reinforced concrete junction boxes shall be 6-inches, 8-inches when invert is in excess of 6-feet.
2. The inside dimension of junction boxes shall be such as to provide a minimum of 3-inches clearance on the outside diameter of the largest outfall pipe.
3. All manholes shall have the standard 24-inch manhole cover (Phoenix P1090, Pinkerton A640, or approved equal).

D. Other Structures. The following requirements shall apply to other drainage structures, as noted:

1. All headwalls, wingwalls, and endwalls shall be of reinforced Portland cement concrete which complies with the compressive strength requirements found in Appendix C.
2. All headwalls, wingwalls, and endwalls shall be considered individually and shall be designed in accordance with the State Standard Specifications unless approved otherwise by the Department.
3. Trash racks shall be provided where, in the opinion of the Department, they are necessary to prevent clogging of culverts and storm drains or to provide safety to the general public.
4. Guardrail or pedestrian/worker railings may be required by the Department at culverts, headwalls, box culverts, and on steep side-slopes. When so required, the railing shall be installed in accordance with State Standard Specifications and CBC.
5. For reinforced concrete box culverts and structural plate arch culverts, all materials, designs, and construction shall conform to the provisions of the State Standard Specifications unless approved otherwise by the Department.

5.1.6 Flood Control Basins

Surface and Subsurface flood control basins designed for retention or detention are permitted in the County of San Luis Obispo. The Department must approve the type of basin used based on the downstream hydrology for each development site, physical site and historic conditions, and County policies. In all cases, the Project Engineer shall provide evidence that the basin will completely drain within seven (7) days to the satisfaction of the Department.

If a basin is determined to be required to serve a particular subdivision or land development project which was not evaluated during the application phase of the project, then the Developer shall consult with the Department of Planning and Building to determine if a grading permit or land use permit is required for the construction of the basin. If a permit is required, a copy must be submitted to the Department prior to approval of the plans.

A. Retention Basin. Any flood control basin which is used as a terminal disposal facility shall be classified as a retention basin.

1. Basin Capacity. The basin capacity is to be based on the theoretical runoff from a 50-year storm, 10-hour intensity for 10-hour duration. No reduction in required capacity shall be given for soil percolation rates. In addition, an antecedent moisture factor of 1.3 shall be required in locations where there are limited areas for overflow (i.e., a natural sump).
2. Inlet Structure. The inlet structure shall be designed to meet the requirements of Section 5.1.5 B.
3. Infiltration Test Required. A minimum of three (3) infiltration tests per basin shall be submitted to the Department for approval prior to construction to determine that the basin will be able to drain within the 7-day standard noted above. Soil borings may be required by the Department in areas where there is concern about shallow depth to groundwater.

B. Detention Basin. Any flood control basin which has a downstream outlet designed to meter the outflow shall be classified as a detention basin. Basin capacity shall be based on receiving the runoff from a 50-year storm with the watershed in its fully-developed condition and releasing the flow equivalent to the runoff from a 2-year storm with the project site in its pre-development condition. The outlet shall release water in a non-erosive manner. Orifice plates may not be permitted by the Department as a metering device.

C. Surface Basins. Surface basins, which are typically earthen, may be used for either retention or detention of site runoff, and are classified as either deep or shallow. Surface basins may meet the Underground Injection Control (UIC) definition of a Class V well if the vertical graded height is deeper than its widest surface dimension, and if so, must be registered with US EPA's Region 9 Office.

1. Deep Basins. The depth to the overflow point is greater than 2-feet. Deep basins shall be designed according to Standard Drawing D-1.
2. Shallow Basins. The depth to the overflow point is 2-feet or less. Shallow basins shall be designed according to Standard Drawing D-1a.
3. Bioretention Basins. The depth to the overflow point is 6-inches or less. Bioretention basins shall be designed according to "Stormwater Requirements for New Construction" (see Department website). A minimum of three (3) infiltration tests per basin shall be submitted to the Department for approval prior to construction.

D. Subsurface Basins. Subsurface basins may be used for either retention or detention of site runoff, where their application is suitable for project conditions. Subsurface systems include dry wells, bored wells, and any subsurface infiltration system (manufactured chambers) used to enhance infiltration capabilities or used to comply with County ordinances.

All subsurface systems meet the Underground Injection Control (UIC) definition of a Class V well. Therefore, subsurface drainages systems must:

1. Be registered with US EPA's Region 9 Office.
2. Be designed, constructed, and maintained in a manner that will not endanger Underground Sources of Drinking Water (USDW).

3. Design Criteria. The Department will review all development plans proposing subsurface stormwater systems based on the following criteria:

   i. Not permitted on project sites having an elevated risk of releasing contaminants (spills), such as vehicle repair, or fueling stations; facilities that store, transfer, or generate hazardous materials; auto part recycling facilities; and sites with a history of spills or illegal dumping.

   ii. Must incorporate pre-treatment devices to isolate and contain trash, solids, TSS, oil, and grease.

   iii. Must incorporate appropriately labeled inspection and maintenance access ports, labeled "STORM".

   iv. Must include an operation and maintenance manual and schedule.

   v. Must include additional storage volume equal to 20-percent of the maximum storage depth.

   vi. Must submit a soils report that substantiates:

      (1) Soil infiltration rate. Percolation rate testing may be performed; however, results shall be converted to soil infiltration rates. Soil percolation rate:

Percolation rate (minutes/inch)	Minimum distance to groundwater (feet)
<1	50
1-4	20
5-29	8
30 up	5

      (2) Soil Type – Not suitable in soils with >30% clay or >40% silt content.

      (3) Depth to seasonally high-water table.

   vii. Must conform to the minimum setback requirements:

Item	Setback (min.)
Buildings, structures, property lines, and domestic water service lines	10 feet[2]
Seasonally high-water table	10 feet
Tree canopy	10 feet
Water distribution lines (mains)	25 feet[3]
Water supply wells, streams, springs, ponds	100 feet
Natural ground slopes	15 percent max.
Proximity to cut or natural slope	Per soils engineer

[2] Additional setback requirements per Section 1804 of the CBC

[3] State of CA Waterworks Standards, Title 22, Chapter 16, Section 64572.

viii. Must address other design considerations including:

(1) Surface (vehicle) loading characteristics.

(2) Distance to building foundations and basements.

(3) Maintenance practicality considering access, access ports, and landscaping.

(4) Lateral clearances to wells and septic facilities per Local Agency Management Plans (LAMP).

(5) Dry well separation between wells (center to center): 100 feet recommended.

(6) Dry well penetration: 10-feet minimum into permeable porous soils recommended.

(7) Dry well surface inlet: 3-inch minimum above bottom of retention basin recommended if located within basin.

4. Materials.

i. Storage Chambers. Must be fully perforated (by the manufacturer) HDPE or HP storm pipe with a minimum diameter of 18-inches and a maximum diameter of 60-inches. Larger diameter pipes or infiltration chamber systems may be used with approval from the Department. Storage chambers shall meet the requirements of this Section and AASHTO Section 12 (including Load and Resistance Factor Design - LRFD - requirements).

ii. Drain Rock. Drain rock shall be Class 2 permeable material conforming to the State Standard Special Provisions and consist of hard durable clean gravel or crushed stone free from organic material, clay, or other deleterious substances. In the absence of laboratory tests, the Project Engineer may assume a "void ratio" not to exceed 40-percent of the volume of the drain rock backfill in the computation of the storage volume of the subsurface basin.

iii. Geotextiles. Filter fabric shall comply with the requirements of AASHTO M288, Class 2 non-woven, or as specified by the manufacturer.

5. Operational Requirements.

i. Include provisions and maintenance schedule for pretreatment facility.

ii. Maintenance plan, including provisions for vehicular access and confined-space entry safety requirements, where applicable.

iii. Overflow path (see 5.1.6. F), including easements as required.

iv. Freeboard (see 5.1.6 H) – may be included in parking areas per the requirements of 5.1.6. K.

E. Easement Requirements. All drainage basins accepting runoff from public roads, streets or other public areas shall be located in an easement offered for dedication to the public. If a fence is required, it shall be located not more than 4-inches inside the drainage easement line except where setbacks are required as part of the land use permit or by the Land Use Ordinance.

F. Overflow Path Required. The design of all drainage basins shall identify the designated route for overflow. The Project Engineer shall design the overflow path so that the flow in a 100-year storm is non-erosive and will not damage downstream improvements, including other basins. Easements will be required for concentrated flows onto private properties. Comply with erosivity standards (see 5.1.7).

G. Fencing Requirements. Shallow Basins, bioretention basins, and subsurface basins are not required to be fenced. All deep basins must be fenced according to the specifications found in the Materials section below. Shallow and Deep Basins are defined in 5.1.6 C.

H. Surface Basin Freeboard Requirements. All basins shall be designed to provide "freeboard," measured from the design water surface to the lowest-elevation (the "overflow point") at which the basin would overflow during a greater-than-design storm. This overflow point may be a location on the basin perimeter, a point outside the basin perimeter if the location is a natural sump, or the flowline of the inlet structure for gutter flow entering the basin. An overflow path shall be identified as required in 5.1.6.F. The amount of freeboard to be provided under design-storm conditions is as follows:

   1. Deep basins require 1-foot of freeboard above the design-storm water surface elevation.
   2. Shallow basins require freeboard equal to 15-percent of their design depth.
   3. Bioretention basins freeboard to comply with "Stormwater Requirements for New Construction" (see Department website) and be determined by engineer.

I. Bench Requirements. All drainage basins shall provide a bench around the perimeter to provide for maintenance, as follows:

   1. Deep basins shall provide a bench 5-feet wide between the fence and the top of the basin side slope.
   2. Shallow basins shall provide a bench 5-feet wide between the easement line and the top of the basin side slope.

J. Maintenance Requirements. Perpetual maintenance of all drainage basins shall be the responsibility of the Developer and subsequent owner(s) unless the maintenance responsibility is accepted by a public entity or a property owners' association.

K. Parking Areas. Parking areas may be used to store part or all of the volume required to be retained or detained, subject to the following criteria:

   1. The maximum depth of inundation in the design storm shall be 6-inches.
   2. No more than 75-percent of the parking area shall be inundated in the Primary Design Storm. ADA parking shall not be inundated in the Primary Design Storm.

5.1.7 Channels and Swales

All channel realignment or improvement shall be shown on the improvement plans and shall conform to the requirements of these Public Improvement Standards. No diversion to roadside ditches will be allowed from natural drainage courses.

A. Types. Open conduits may be natural watercourses, earthen channels or swales, or channels or swales lined with the materials such as those listed below. Channels lined with impermeable surfaces (such as concrete, mortar or pipe-like materials) are discouraged and shall only be used where permeable linings are impractical:

1. Low-growing grass, which will form a thick, dense sod. The proposed grass mixture is to be submitted to and approved by the Department.
2. Temporary or permanent turf reinforcement mats/erosion control blankets.
3. Rock slope protection, class and placement to be determined by the Project Engineer.
4. Concreted-rock slope protection, class and placement to be determined by the Project Engineer.
5. Concrete slope paving.
6. Air-blown mortar, with reinforcement as determined necessary by the Project Engineer.
7. Gabions – only if required by permit conditions from other regulatory agencies.
8. Other natural linings approved by the Resource Conservation District or State/Federal regulatory agencies.

Lining materials selected shall be non-erosive under velocities calculated in the design storm and which will provide for ease of ongoing maintenance as approved by the Department. Where linings are required, they shall extend to the full height of freeboard as defined below.

B. Freeboard and Side Slopes Required. Realigned channels or swales may be required to be lined to an elevation of at least 1.0-foot above the design hydraulic gradient. The side slopes for realigned channels or swales shall not exceed 1:1 on the lined portion and 2:1 on the unlined portion (3:1 in sandy soil). Freeboard of at least 1-foot, or 0.2 of the specific energy (whichever is greater) shall be provided at design capacity for all channels or swales.

C. Improvement Plans. For all intermediate or major channels, either realigned or natural, within an improvement, the following information shall be shown on improvement plans in addition to the information heretofore required:

1. Typical sections.
2. Profile of the existing channel for a minimum of 500-feet each side of the development in order to establish an average profile grade through the development.

D. Velocity Requirements. Channels or swales shall comply with the following requirements:

1. Minimum velocity for channels or swales flowing full, with freeboard, shall be 2-feet per second (2 fps).
2. Minimum velocity in bioswales may be less than 2 fps but shall be as needed for positive drainage.
3. The maximum velocity in constructed, unlined earth channels or swales shall not exceed that which would cause erosion, which is typically less than 4 fps.
4. The maximum velocity concrete lined channels shall not exceed 10 fps.

E. Natural Waterways. The design flow may be allowed in the natural overflow area if a drainage easement is provided, (which will include the overflow area), and freeboard as specified above, exists between the water surface and adjacent ground.

F. Channel Side Inlets. Drainage facilities shall be so constructed and areas adjacent to channels so graded that side drainage will enter in a manner which will prevent erosion. This will often require constructed side inlets and collector ditches to carry side flow to inlets.

G. Fencing Requirements. For all open-conduit drainage facilities, the following requirements shall apply:

1. Constructed channels or swales with side slopes 5:1 or flatter may not require fencing, unless determined necessary by the Department for public safety.
2. Natural channels need not be fenced, except where special hazards exist.
3. For minor channels or swales with depths less than 3-feet and for localized areas not steeper than 5:1 on other channels or swales, the Department may allow the fence requirement to be waived.
4. Any required fence shall be located no more than 4-inches within the required easement lines and shall provide sufficient room for maintenance vehicles as set out, or as specified by the Department.

5.1.8 Culverts

All culverts shall be shown on the improvement plans and shall conform to the requirements of the State Standard Specifications unless approved otherwise by the Department.

A. Types. Culverts shall be precast reinforced concrete pipe or HDPE corrugated pipe with smooth interior walls. Corrugated steel pipe and PVC pipe shall not be used for culverts in public improvements. Aluminum pipe shall not be used if concrete structures such as headwalls or future storm drain inlets are ever to be constructed upon them. HDPE pipe, when used, shall be completely buried to avoid degradation from ultraviolet radiation.

B. Minimum Diameter. Minimum pipe diameter allowable on any storm drain which will be maintained by the County shall be 18-inches, but 24-inches or larger is encouraged for easier maintenance. A lesser size may be used for down drains on fill slopes, or for privately-maintained facilities, if approved by the Department. If smaller pipes are approved for use, they shall include cleanouts with maximum 100-feet spacing and at all junctions as required.

C. Hydraulic Design Requirements. Waterways placed in culvert systems may be designed for full conduit capacity and pressure flow. The hydraulic entrance condition at a culvert minor waterway shall be such that the Primary Design Storm discharge will have the specified freeboard in the upstream channel or waterway and that the 100-year discharge will be contained within the banks of the upstream waterway or drainage easement. The entrance to the culvert conveying a minor waterway may be submerged provided that the above criteria are satisfied and that there is no damage from backwater inundation.

D. Velocity Requirements. Culverts shall comply with the following requirements:

1. Minimum design velocity in culverts shall be 2 fps when conduit is flowing at the 2-year design discharge.
2. Maximum design velocity shall not exceed 15 fps when culvert is flowing at the 50-year or 100-year design discharge.

E. Preformed Flared End Sections. Preformed concrete or plastic end sections shall be utilized, unless greater protection is required.

F. Cover Requirements. Minimum thickness of cover shall be 3-feet within the full width of the traveled way and shoulder. At locations where the general minimum cover requirements cannot feasibly be obtained, the cover may be reduced as follows, or the conduit shall be encased in concrete per Standard Drawing U-4b.

Minimum Thickness of Cover at Edge of Travelled Way			
CMP & CMPA	***RCP Under Rigid Pavement***	***RCP Under Flexible Pavement or Unpaved***	***HDPE***
D/8 or 24" Min.	12" Min.	D/8 or 24" Min.	D/2 or 24" Min.

G. Separation from Water Mains. There shall be a minimum 12-inch separation (O.D. to O.D.) between storm drains and water mains. Where either pipe is protected by concrete encasement, the separation shall be measured to the outside of the concrete encasement.

H. Separation from Sewer Mains. There shall be a minimum separation of 4-feet (O.D. to O.D.) between storm drains (and structures) and sanitary sewer mains (and structures). Where either pipe is protected by concrete encasement, the separation shall be measured to the outside of the concrete encasement. Where maintaining the 4-feet of separation is not practical, special designs may be approved by the department to minimize the potential for cross contamination

I. Subsurface Drainage. Where a road section will retain subsurface drainage within cut slopes of newly-constructed roads, the Department may require the installation of a subsurface drainage system, minimum 4-inches in diameter, with cleanouts as shown in the State Standard Plans.

5.1.9 Outfalls

A. Improvement Plans. All drainage outfalls shall be shown both in plan and profile on the improvement plans until a definite “daylight” condition is established.

B. Accommodation for Future or Phased Development. When improvements have more than one unit or phase, the drainage outfall shall be designed to extend to the property boundary and beyond if required. All outfalls, whether temporary or final, shall be shown both in plan and profile on improvement plans and shall be designed to operate safely even if future units or phases are never completed. Necessary easements and agreements shall be provided prior to approval of improvement plans.

C. Culvert Energy Dissipaters. Energy dissipaters shall be designed in accordance with the provisions of the State *Highway Design Manual* Topic 827. The following items shall be determined and shown on the plans:

1. Stable rock size (weight)
2. Rock Slope Protection (RSP) class
3. Dissipater trench dimensions
4. Rock placement method
5. RSP fabric type

Culvert energy dissipaters shall be designed for the flow from the Primary Design Storm. Rock slope protection gradation shall conform to the State Standard Specifications.

5.1.10 Drainage pumps

The use of drainage pumps shall be avoided and used only with the approval of the Department.

A. Gravity Outfall during Summer. If the use of a drainage pump is approved, the drainage system shall be so designed as to provide for gravity outfall during summer months and periods of low water stages. If a low stage gravity outfall is impossible or impracticable, a pump of smaller capacity for low stage flow may be used. Additional improvements may be required to handle adverse impacts downstream. Approval must be granted by the Department.

B. Standby Equipment. Drainage pumps shall be equipped with standby equipment for power and pumps. Pumps shall have alternating operation characteristics.

C. Floodgates. When specified by the Department, the outfall shall be equipped with floodgates of an approved design.

D. Design Storm. Pumping installations shall be so designed as to accommodate a design storm as specified by the Department.

E. Pump Design. Pumping stations shall be designed so that gravity flow does not flow through the pump pit. Each pumping installation shall receive separate approval including all machinery, electrical system, piping system, housing installation, and other miscellaneous design features.

F. Maintenance. Maintenance of all drainage pumps shall be the responsibility of the Developer unless the maintenance responsibility is assumed by a public entity or a property owner's association.

5.2 Construction Specifications

5.2.1 Materials

All drainage items shall be of the material and construction methods required in accordance with the applicable portions of the State Standard Specifications as herein noted, specified or modified.

A. Pipe. Culvert pipe shall comply with the following requirements:

1. Reinforced Concrete Pipe (RCP) including laying and jointing shall conform to the specifications of the State Standard Specifications.
2. Corrugated Steel Pipe may be authorized on a case-by-case basis and shall conform to the material and construction methods of Section 66 of the State Standard Specifications. Wall thickness shall be specified. Attention is directed to backfill requirements of Section 19-3 of the State Standard Specifications.
3. High-Density Polyethylene (HDPE) smooth-inner-wall pipe shall conform to the provisions of the State Standard Specifications and to AASHTO M-294-03. Installation and backfill shall conform to the requirements of the State Standard Specifications.
4. Polypropylene (PP) pipe shall conform to the provisions of the State Standard Specifications and to AASHTO M330 (except minimum stiffness values shall conform to ASTM F2881). Installation and backfill shall conform to the requirements of the State Standard Specifications.

B. Concrete. Concrete Structures shall conform to the requirements of the State Standard Specifications.

C. Reinforcement. Shall conform to the requirements of the State Standard Specifications.

D. Portland Cement Concrete. Shall conform to the compressive strength requirements found in Appendix C.

E. Geotextile Lined Channels and Swales. Adequate vegetative cover shall be established throughout all geotextile channel and swale linings. The Project Engineer shall demonstrate that a proposed geotextile lining is adequate for the velocity and shear stress that will be experienced in the Primary Design Storm.

F. Concrete Lined Channels. Concrete lined channels shall be constructed of the materials and in accordance with the State Standard Specifications.

G. Grouted Rock Rip Rap Channels. Shall conform to the materials and methods called for in the State Standard Specifications.

H. Weep Holes. Weep hole pipe consisting of 2.5-inch diameter galvanized iron pipe shall be placed through the grouted rock rip rap along both sides of the channel approximately 1-foot above the channel invert. Spacing of weep holes shall be such as to provide complete drainage of the foundation and filter material and shall not exceed 10-feet.

I. Fencing. Fencing required for drainage channels or basins, as determined above, shall comply with the following requirements:

1. Fence for drainage channel enclosure shall be, at a minimum, 6-feet chain link as specified in the State Standard Specifications, with or without extension arms and barbed wire as specified on the plans, or Department approved equal.
2. Chain link fence shall be of the materials and construction as specified in the State Standard Specifications.
3. Drive gates and walk gates will be provided, complete with master keyed locks and keys, at such locations as specified by the Department for the purpose of maintenance vehicles and personnel.
4. Other fencing materials may be considered for facilities which are not to be maintained by the County and will require approval by the Department prior to improvement plan approval.

J. Landscaping. Where landscaping is required by project conditions of approval for any constructed drainage facility, the following requirements shall apply:

1. Plants shall be selected to be appropriate for the climate zone where they are to be installed and shall be drought-tolerant.
2. On the bottom and sides of flood control basins, landscaping shall be limited to grass or other ground cover. No shrubs or trees shall be permitted.
3. The Project Engineer shall submit a landscape plan for approval. The Department shall coordinate this approval with the Department of Planning and Building.
4. Maintenance of all landscaping and irrigation shall be the responsibility of the Developer unless the maintenance responsibility is assumed by a public entity or a property owner's association.

5.2.2 Installation

A. Backfill. Structure Backfill shall conform to the requirements of the State Standard Specifications and the following requirements:

1. Inspection Required. Structure backfill shall not be placed until the structure footings or other portions of the structure or facility have been inspected and approved for backfilling as directed by the Department.
2. Suitable Material Required. When the material from the structure excavation is unsuitable for use as structure backfill, it shall be disposed of as directed by the Department and shall be replaced by suitable material approved by the Department.

B. Sawcut and Pavement Replacement. Any installations requiring trenching or excavation into existing paved areas, shall comply with the requirements of Section 3.2.1.I of these Standards.

Section 6. Water Supply

Water lines and appurtenances within County-operated special districts shall be constructed in accordance with the details shown on plans and specifications approved by the Department.

Where a water system in the unincorporated area of the County is to be operated and/or maintained by any public agency other than the County or other purveyor regulated by the State of California, the plans and specifications and construction must be approved by both the Department and by that entity. In the event of any discrepancy or conflict between these Public Improvement Standards and the requirements of said water purveyor, that entity's requirements shall take precedence.

Water mains connecting existing publicly regulated water distribution systems shall be installed to serve each lot in subdivisions containing lots of one acre or less. Any agency serving water for human consumption or for domestic uses shall hold a permit as provided by the Health and Safety Code of the State of California and shall comply with all applicable laws and regulations of the State of California and the County Department of Public Health/Environmental Health Services. Installation of water mains and all appurtenances thereto will be installed to grades, location, design, and sizes approved by the Department for the public or private water and fire agencies, the governing bodies thereof and the Department as defined in this document.

When connection to an existing publicly regulated water system is not available, the Developer shall provide water service by the establishment of a public water system or of a private water company which is subject to the regulations of the State Public Utilities Commission except as provided elsewhere for subdivisions containing lots of one acre or more.

The County Health Department is the review authority for State Small Water Systems (5 to 14 service connections) and Community Water Systems (15 to 199 service connections). For water systems larger than 200 service connections the State Department of Health Services is the review authority. These agencies should be contacted for technical approval prior to the submittal of detailed improvement plans to this Department.

State Law, the Sustainable Groundwater Management Act (SGMA), requires sustainable groundwater management in all high and medium priority basins throughout California, including six basins partially or wholly within San Luis Obispo County. The Groundwater Sustainability Department reviews development applications involving water supply infrastructure within SGMA boundaries.

6.1 Design Standards

6.1.1 Quantity of Water

The quantity of water delivered to the distribution system from all sources must be sufficient to supply adequately, dependably, and safely meet the total requirements of all customers (including fire hydrants) under maximum consumption. The distribution system must be capable of adequately delivering this water supply to all the customers. Storage facilities must be

provided to care for the minimum sanitary and firefighting requirements during breakdowns and repair of wells and pumps. Storage may also be required to store water during off-peak periods for use during peak demand periods. Formulas are presented below as a guide to determine the adequacy of proposed water systems in meeting the above requirements.

Prior to submittal of plans for Small Public Water Systems to the Department for review, the Project Engineer shall consult with the Department of Public Health/Environmental Health Services, and the local fire protection agency. Public Works shall require written clearance from each of these agencies, indicating their approval of design parameters including, but not limited to:

- Minimum daily flow rate (gallons per minute)
- Fire flow (gallons per minute)
- Water pressure (psi)
- Storage volume (gallons)
- Hydrant spacing (feet)
- Hydrant type

As a guide, the supply available at a given point in the system is required to be no less than 1,000 gpm at a residual pressure of 20 psi. The Project Engineer shall provide calculation of the Q required in each of the scenarios described in this section. Whichever calculation shows the greatest quantity shall govern the design.

A. Number of Customers. For calculating supply and storage requirements, the number of customers shall be determined as follows:

   1. In residential areas, each single-family home or lot will be counted as one (1) customer. Each unit of a multi-family dwelling will be counted as one-half (1/2) customer.
   2. In commercial and industrial areas, each acre (including storage and parking area) will be counted as a minimum five (5) customers.
   3. In parks and landscaped areas, each acre of land will be counted as two (2) customers, except where specific design indicates otherwise.
   4. In a mobile home subdivision, each unit or space will be counted as three-quarters (3/4) customer.

B. Average Demand. To meet customer demand for water in residential and commercial areas, water supply sources must be capable of producing a minimum of 400-gallons per day per customer served. Industrial and agricultural area requirements are determined for the industries and agriculture involved and added to the residential and commercial demands. Average demand rate shall be increased to equal peak demand rate times the specified period over which peak demand is used.

Average Demand (gallons per day) = +400L[4] + DI

Where:

L = number of residential and commercial customers served by the system (excluding industrial areas)

I = industrial or agricultural areas (in acres) served by the system

D = demand (in gallons per day per acre) for the industrial or agricultural areas served by the system

C. Peak Hourly Demand. To meet customer and fire protection demand, the combination of well pump capacity, well capacity, firm surface water supply, and system storage must be capable of delivering five gallons per minute (5 gpm) per customer for metered systems, nine gallons per minute (9 gpm) per customer for flat rate systems plus fire flow requirements dependent on the type of development in the area. The customer requirement is to be modified by a factor of (f) varying from 2.00 to 0.33, dependent on the number of services in the system. The system must be capable of delivering this flow for two to four hours depending on the number of services in the system. Pipeline size can also be computed from the formula below by using factors for the portion of the system served by the pipeline whose size is to be determined. In doing this, any one hydrant in the system must be capable of meeting the required fire flow. Under certain conditions, the engineer of the Fire District having jurisdiction may require a larger minimum size of pipeline in certain locations.

(2) Peak hourly demand (gallons/minute) = Ncf + F + X + Y

N = number of residential and commercial services in the system

c = 5 gallons per minute (metered service) or 9 gallons per minute (flat rate service)

Customer Requirement Modification factor (f)

Number of services	Value of "f"
5 or less	2.00
25	1.33
40	1.00
80	0.75
200	0.50
500	0.33

Note: Intermediate values may be interpolated.

Fire Requirements (F)

Fire flow requirements are determined by the adopted fire code and by the local fire protection authority.

Building Density	F = flow from hydrant (gallons per minute)

[4] B. Lakshman, Design of Residential Water Supply Systems to Meet Peak Hour Demand, Artesian Water Co., Newark, DE

Residential Zones	The minimum flow requirement for residential development F = 1,000 gpm for a two-hour duration, at 20 to 150 psi.
Commercial Zones	The minimum flow requirement for commercial and industrial development is based on the size and type of construction and buildings served. Flow shall not be less than F = 1,500 gpm at 20 to 150 psi.

X = peak agricultural demand on system in gallons per minute
Y = peak industrial demand on system in gallons per minute

D. Master Planning. For master planning for new or expanding community water distribution systems, the following will be a guide:

- Residential: 1,500 gpm
- Commercial/Industrial*: 2,500 gpm
- Urban downtown development/Heavy industrial: 4,500 gpm

* Will require more fire flow for hazardous buildings.

E. Storage. To meet minimum sanitary demands and the necessary quantity of water for fire protection during periods of pump breakdown, there must be the following minimum quantities of water stored per acre served. However, in no case shall the storage for any new subdivision be less than 30,000 gallons. The storage requirement may be increased due to the inability of the source to produce water at the peak demand rate.

Required Storage Capacity

Lot size (acres)	Required storage capacity (gallons per acre served)
less than ½	1,000
1	800
2	650
3	500
4	350
5	200

The above requirements are not applicable in subdivisions with lots of one acre or larger where the water supply may be from wells or some other source on individual lots.

F. Required Residential Supply. In addition to meeting the above requirements, the system must also meet the following requirements in approving all water systems for adequate source and storage capacities.

1. The peak hourly residential flow or the sum of the minimum fire flow plus one-half (1/2) of the peak hourly residential flow, whichever is greater, shall be maintained for the period of time shown below:

Required Residential Supply

Number of Services	Duration
less than 100	2 hours
100-250	3 hours
greater than 250	4 hours

With the most critical well or pump inoperative, a minimum of two-thirds (2/3) of the above flow shall be maintained for the time specified. This requirement may be met by drawing from both well pumping and storage.

2. The minimum residential flow shall be equal to one-half (1/2) of the peak hourly residential flow and shall be maintained for a period of three days. This requirement may be met from a combined source of the wells and storage.
3. The average daily residential flow for the maximum month shall be equal to one-third (1/3) of the peak hourly residential flow and shall be maintained continuously from the well pumping only.
4. If the original source of the water is not from a well, then requirements will be developed by the Department on an individual project basis. It is the intent that the supply of water and fire protection provided be equivalent to that noted above when the original source is from a well; this may require a larger storage facility.

6.1.2 Areas of Conflict between Water and Sewer Lines

In the interest of public health and to minimize the possibility of contamination of the public water supply, the construction requirements included in Standard Drawing U-3 series shall be met at any time that the separation between water and sewer lines is less than the basic separation standards contained in State regulations. These requirements apply to construction of a water main, sewer main, sewer lateral, or any other type of construction causing the separation to be less than that indicated. All special construction required herein is to be discussed thoroughly with the Department of Public Works and the Department of Public Health/Environmental Health Services prior to starting any work and is subject to Department approval.

6.1.3 Distribution System

A. Operating Pressure. Water distribution system mains shall be designed to maintain normal operating pressures of not less than 25 psig at the service connection except that during periods of hourly maximum demand as defined above, the pressure may be not less than 20 psig with the storage tank at the low end of its operating storage level and may not be more than 150 psig. Computations shall be submitted to demonstrate that these maximum and minimum pressures will be met. Variations in pressures under normal operations shall not exceed 5.0-percent.

B. Size of Water Mains. Water mains shall be not less than 8-inches inside diameter unless otherwise specified. Water mains of 6-inches shall be limited to cul-de-sacs less than 400-feet long. All dead-end mains shall be provided with a standard blow-off, hydrant, or other acceptable means of flushing. Mains shall be equipped with blow-off valves at low points and air relief valves at high points.

C. Alignment and Layout of Mains. The distribution system, wherever possible, shall be in grid form so that pressures throughout the system tend to become equalized under varying rates and locations of drafts.

   1. Primary feeders, also known as "arterial mains", form the skeleton of the distribution system. They shall be located so that large quantities of water can be carried from the pumping plant to and from the storage tanks and distribution system.

   2. Primary feeders shall be arranged in several interlocking loops to allow continuous service through the primary mains even when one portion is shut down temporarily. Looping will also allow supply from two directions for large fire flows. The primary mains shall not be further than 3,000-feet apart.

   3. Secondary feeders carry water from the primary feeders to points in the system. They should form smaller loops within the loops of the primary mains, by running from one primary feeder to another. Secondary feeders shall be placed only a few blocks apart.

D. Dual Mains. Dual mains (one (1) pipeline on each side of the street) shall be installed in streets with 20-year forecast Average Daily Traffic (ADT) 16,000 or greater, if required by the Department. In those streets classified for dual mains, the minimum size shall be 8-inches. The distribution system shall be grid-ironed as necessary to provide the flows and pressures specified in Section 6.1.1.

E. Valves. The distribution system shall be equipped with a sufficient number of valves so that no single shutdown will result in shutting down a transmission main or necessitate the removal from service of a length of pipe greater than 500-feet in high-value districts or greater than 800-feet in other sections. In no case shall valves be so located that any section of main can be shut down without going to more than three locations to close valves. Valves shall not be located in gutters, spandrels, or cross-gutters. Existing valves shall be relocated insofar as practical.

F. Hydrants. Fire hydrants shall be placed at street intersections whenever possible and shall be located to minimize the hazard of damage by traffic. In addition, hydrant spacing shall conform with the following requirements:

1. Residential areas: Maximum spacing 500-feet except on dead-end streets, it shall be no more than 400-feet. The maximum distance from any point on the street frontage to a hydrant shall be 250-feet.
2. Commercial/industrial areas: Maximum spacing 250-feet or less when required by the fire official. Hydrants or tie-ins for future hydrants may be required by the fire official and shall typically limit the distance from any point on the exterior of any building to 150-feet.

G. Service Lines. Service lines from the water main to the property line shall normally be installed at the time the main is constructed to avoid frequent cutting of the street. Single and double service lines shall be 1-inch minimum inside diameter.

H. Thrust Blocks. Concrete thrust blocks shall be installed to properly restrain and protect pipeline, as shown in the Standard Drawing W-1 series. Thrust blocks shall conform with the compressive strength requirements provided in Appendix C and shall be cast in place at all bends of 22.5-degrees or more, at the end of plugged mains, behind each tee, each cross which is valved in such a manner that they can act as a tee, and at the back of fire hydrants. The thrust block shall extend from the fitting to undisturbed soil and shall be of such bearing area as to assure adequate resistance to the force to be encountered. Prior to pouring concrete, all fittings shall be wrapped in minimum 8-mil polyethylene plastic sheet to protect bolts from being covered with concrete. In lieu of the above, movement may be prevented by the use of restraining joints where thrust blocks are not feasible due to limited space or other reasons, subject to the prior approval of the Department.

I. Valve Anchors. Concrete valve anchors shall be provided at all in-line valves and shall be installed in accordance with Standard Drawing W-3. Prior to pouring concrete, all fittings shall be wrapped in plastic to protect bolts from being covered with concrete.

J. Air and Vacuum Release Valves. Air and vacuum release valves shall be installed in the water system at all points where it is indicated that air pockets may form. The design shall be such as to ensure the release of air automatically from the water main. These valves may also ensure the entrance of air into the water main when the pressure inside the line is below atmospheric pressure. All valves shall be designed for a minimum of 150 psi operating pressure. The inlet to each valve shall be provided with a gate valve or corporation stop to provide a positive closure between the main pipeline and the air and vacuum release valve, and the air and vacuum release vent outlet shall be installed above ground in such a manner as to preclude backflow. They shall be located to provide the minimum lateral clearance as defined in Section 4 of these Standards.

K. Blow-offs. A blow-off or fire hydrant shall be installed in the water system at all dead-ends and low points.

L. Sampling Stations. Sampling stations shall be installed according to the requirements established by the water purveyor. At a minimum, they shall comply with the following requirements:

1. There shall be at least one sampling station for each pressure zone in a system.
2. Sampling stations shall be located at least 100-feet from a fire hydrant.
3. Sampling stations shall not be placed past the last service connection on a dead-end main.

4. If a system has more than one service loop, there shall be at least one sampling station in each service loop.
5. For each water source, there shall be one sampling station located where raw (untreated) water from the source can be sampled.

6.1.4 Cross Connections

A. Backflow Prevention Required. Backflow prevention devices shall be installed on all service connections that pose a potential threat to health and safety of the community. At a minimum, the following service connections shall require backflow prevention:

1. Landscape irrigation
2. Medical and health care facilities
3. Areas served by private wells
4. Restaurants and other food-preparation facilities
5. Private fire-protection lines including fire sprinkler systems
6. Laboratories
7. Commercial and industrial facilities that use water for other than domestic purposes

B. Backflow Prevention Devices. The type of backflow prevention device shall be in accordance with the California Department of Health Services regulations relating to cross-connections (California Code of Regulations, Section 7604). The type of device and the method of installation shall also be subject to review and approval of the County Department of Public Health/Environmental Health Services, and the Department where such devices are proposed to be installed on lines and appurtenances within its jurisdiction.

C. Location of Backflow Prevention Devices. Backflow prevention devices shall be located as close as practical to the point of connection. In addition, backflow devices shall be located in accordance with Section 7603 of the California Code of Regulations.

D. Ownership and Maintenance. The property owner where any service connection requiring a backflow prevention device is located shall be responsible for operation and maintenance of said device. The County shall not be responsible for operation and maintenance of these devices.

6.1.5 Water Well Metering

Water well meters shall be designed and installed in accordance with Department's "Well Water Metering Standards and Installation Guidelines" (Procedural Memorandum O-10) whenever metering of a water well is required by the County of San Luis Obispo or the County's Flood Control and Water Conservation District. This includes but is not limited to the requirements associated with the following:

- County of San Luis Obispo Ordinance No. 3246,

- Nacimiento lakeside water users,
- County of San Luis Obispo Ordinance No. 2343,
- All others

6.2 Construction Specifications

6.2.1 Materials

A. Pipe. Pipe used in construction of water distribution systems shall be ductile iron, steel pipe, or plastic pipe (PVC) and shall meet the standards of the American Water Works Association (AWWA) where applicable. The use of steel pipe shall be limited to those areas where an engineering evaluation indicates that galvanic (or soil) corrosion is not a problem or provision is made for suitable cathodic protection. The Department may specify which types shall be used in any instance. The supplier shall furnish a certificate stating that all pipes, valves, fittings, protective coatings, and all other materials comply with the specifications of this manual.

1. Ductile Iron Pipe. Ductile iron pipe shall be centrifugally cast ductile iron pipe with ends joined by a method approved by the Department which employs a single elongated rubber gasket to affect the joint, such as "Tyton Joint" or an approved equal. The pipe shall be minimum pressure Class 150 with bituminous coating of coal tar 1 mil thick outside and lined inside with seal-coated cement lining of 1.6 mm minimum thickness, all conforming to applicable ASA and AWWA Specifications. Ductile iron pipe shall be encased in polyethylene material. Above-ground piping shall have flanged joints, be factory-applied epoxy-coated and blue in color.

2. Steel Pipe. Shall conform to and meet the requirements of AWWA Specifications C200 with cement mortar lining and coating in accordance with AWWA Specification C205. The method used for coupling the ends of the pipe, whether mechanically couple welded, bell-and-spigot ends with rubber gasket, or any other type, shall be approved by the Department prior to any use of the pipe.

3. Plastic (PVC) Pipe. Shall be unplasticized Poly Vinyl Chloride (PVC) plastic class water pipe with integral bell and spigot joints or plain-end designed for joint assembly using elastomeric-gasket standard PVC couplings. The pipe shall meet the requirements of AWWA C900 "Poly Vinyl Chloride" (PVC) Pipe and shall be furnished in cast iron (CI) equivalent outside diameters (OD). All Class 150 pipe shall meet the requirements of DR 18, and all Class 200 pipe shall meet the requirements of DR 14. All pipe shall be suitable for use as pressure conduit. Provision must be made for expansion and contraction at each joint with an elastomeric ring. The bell shall consist of an integral wall section with a solid cross-section elastomeric ring which meets the requirements of ASTM D-1869 and F-477. The bell section shall be designed to be at least as strong as the pipe wall. Sizes and dimensions shall be as shown in this specification. Standard laying lengths shall be 20-feet for all sizes. Random lengths shall not be less than 10-feet in length. At least 85-percent of the pipe used shall be standard laying length. Each standard length and

random length of pipe shall be factory-tested to four (4) times the class pressure of the pipe for a minimum of five (5) seconds. The integral bell shall be tested with the pipe.

B. Fittings. Bends, elbows, tees, crosses, and special fittings for water mains shall be cast iron or ductile iron conforming to AWWA C-110, C-153 or approved equal.

1. Reducers. When changes in pipe size are required, eccentric reducers shall be used where appropriate to minimize air pockets.
2. Inside Lining. Fittings shall be cement-mortar lined in accordance with AWWA C-104. Fittings lined in the field will not be considered as conforming to AWWA C-104 and will not be accepted.
3. Outside Coating. The outside of cast iron or ductile iron fittings shall have a bituminous coating of coal tar approximately 1 mil thick unless specified otherwise. The finishing coat shall be continuous and smooth. It shall be neither brittle when cold nor sticky when exposed to the sun and shall adhere strongly to the pipe.

C. Valves and Valve Boxes.

1. Valves. Valves shall open in counter-clockwise direction and shall meet the requirements of AWWA Specification C500 for gate valves and AWWA Specification C504 for butterfly valves. All valves shall be epoxy coated inside and out. The butterfly valve standard is not intended to cover valves for installation where service conditions exceed the shutoff pressures and line velocities stated in Table L of AWWA Specification C504. Gate valves shall be resilient-seated.
2. Air and Vacuum Release Valves. Valves shall meet or exceed the latest revision of ANSI/AWWA C512 Standard for Air Release, Air/Vacuum, and Combination Air Valves for waterworks service. All 2-inch valves shall incorporate stainless steel internal components and National Pipe Threaded (NPT) inlet. All 4-inch and 6-inch valves shall incorporate stainless steel internal components and flanged inlet. Floats, seats, and trim materials shall be inherently corrosion-resistant and have physical properties suitable for the application. The valve manufacturer shall provide a certification stating that the valve conforms to these Standards. Air and vacuum release valves shall be as follows:

Air/Vacuum Release Valves

Pipe Diameter	Air/Vacuum Release Valve
6-12 inches	2-inch
16-20 inches	4-inch
24-36 inches	6-inch

All air and vacuum release valves shall be a minimum outlet size of two (2) inches.

3. Check Valves. All check valves shall seat readily and completely to assure water tightness. The face of the closure element and valve seat shall be bronze, composition, or other non-corrodible material which will seat tightly under all prevailing conditions of field use.

Slow-closing check valves shall be used where excessive pressures or water hammer may occur and the static operating pressure is within 20-percent of the pressure class or rating of the pipe. All check valves 4-inch and larger in size for use of distribution mains shall be designed for a minimum of 175 psi working pressure.

4. Valve Boxes. Valve boxes shall be as shown on Standard Drawing No. W-3. The cover shall be marked "WATER" and shall have a loose fit in the box.

D. Hydrants. Fire hydrants shall be wet or dry barrel type, 30-inch bury, and shall meet the requirements of AWWA Specifications C502 and C503. They shall also meet the requirements set forth by the Fire District in which the improvement is located or by the Department in the absence of a Fire District. They shall also conform with the following requirements:

1. Outlets. In single-family residential areas, fire hydrants shall have not less than two 2.5-inch outlets with National Standard fire thread. In business, industrial, institutional, school, and multifamily dwelling areas, fire hydrants shall have two 2.5-inch outlets with National Standard fire thread and one 4-inch suction outlet with National Standard fire thread. An approved fire hydrant is the CLOW F-2060.

2. Painting Hydrants. All hydrant exteriors are to be painted chrome yellow. The tops and outlet nozzle caps are to be painted as follows, based on the results of fire flow testing specified in Section 6.2.3 C:

Painting Fire Hydrants Tops and Nozzle Caps

Hydrant Class	Color
AA (>1,500 gpm)	light blue
A (1,000-1,499 gpm)	green
B (500-999 gpm)	orange
C (<500 gpm)	red

Within private property, hydrant marking is to be at the discretion of the owner as approved by the local fire protection agency.

All ferrous metal parts of the hydrant shall be thoroughly cleaned, and all surfaces inside and outside shall be coated with two coats of paint. Paint used on the interior shall be compatible with potable water and shall at a minimum conform to the requirements of Federal Specification TT-C-494b. Paint used on the exterior top section shall at a minimum conform to the requirements of Federal Specification TT-P-664.

3. Installation. Break-away bolts shall be used to join the hydrant body to the buried section. The bolts shall conform to ASTM A307, Grade B, and shall have a tensile strength less than the shear force required to break the hydrant body. Bolts shall be filled with silicon. When installing hydrants on PVC mains, the hydrant lateral shall be made of the same material as the main. This will help protect the main from damage if the hydrant is hit during a collision and the break-away bolts do not function properly. If dry-barrel type hydrants are installed, they shall have plugs pulled and leach rock installed.

E. Blow-offs. All blow-offs shall be a minimum outlet size of 2-inches and shall be designed for a minimum operating pressure of 150 psi.

F. Water Service Connections.

1. Materials. The following materials are acceptable for 1-inch service connections:

   i. Polyvinyl Chloride, Schedule 40, ASTM D-1785-68

   ii. Polyethylene tubing, ASTM D-2239-67 P.E. 3306 - Type II - Grade 3 (Flarable)

   The following materials are acceptable for 11/2-inch and larger service connections:

   iii. All of the materials listed above for 1-inch services

   iv. Brass Pipe - shall be seamless red brass conforming to ASTM B-43-58

2. Sizes. Single service connections shall be minimum 1-inch inside diameter. (Note that Polyethylene tubing is normally specified in outside diameter.)

3. Corporation Stops. All corporation stops shall be bronze, round, with iron pipe standard (I.P.S.) thread for steel pipe, and outlet for the type of service pipe used.

4. Meter Stops. All 1-inch (curb) meter stops shall be bronze with inlet for the type of service pipe used and outlet for the type of service pipe or meter coupling used.

5. For 1 1/2-inch and 2-inch service, a bronze curb stop valve, straight ground key curb stop, or bronze gate valve (minimum of 200 psi rated working pressure) may be used. Both inlet and outlet shall be appropriate for the type of service pipe or meter flange used. All valves shall be factory hydro-tested to 300 psi or air-tested to 100 psi under water.

6. Bronze Gate Valve. All 11/2-inch through 3-inch gate valves shall be all bronze and comply with AWWA Standard C500.

7. Standard Service Clamps. All service clamps and straps shall be in accordance with AWWA Standards and the pipe manufacturer's recommendations.

8. Repair Service Clamps. Where no service clamp is required, and the corporation stop does not seal properly, a repair service clamp shall be used.

G. Concrete Thrust Blocks. Portland cement concrete, conforming to the compressive strength requirements found in Appendix C, for thrust blocks shall be produced from commercial-quality aggregate and cement and shall contain not less than five (5) sacks of cement per cubic yard. Hand mixing of this concrete shall not be permitted. Plastic wrap shall be used to protect fitting connections.

H. Storage Facilities and Pumps.

1. Storage. All steel tanks, standpipes, reservoirs, and elevated tanks for water storage shall comply with AWWA Standard D100 and also meet all foundation and seismic requirements of the Building Code. Safety systems including roof railings and anti-fall equipment for ladders shall be installed as required by Cal OSHA. Where limited service life is satisfactory for a particular situation, the Department may approve steel tanks meeting the standards of the American Petroleum Institute (A.P.I.). All inspection, repairing, painting, and repainting of steel tanks, standpipes, reservoirs, and elevated

tanks for water storage shall comply with AWWA Specification D102. Steel tanks shall be welded unless an alternate tank type is approved by the Department.

2. Water Production or Pumping Facilities. All special potable water production or pumping facilities such as groundwater wells/pump stations (including booster pump stations) along with their associated treatment and disinfection systems and their associated electrical switchgear, supplies, and communications equipment shall require special considerations and approval by the Department. The design shall meet all requirements of the Regional Water Quality Control Board, State and County Health Departments, Cal Fire/County Fire, and the Department of Public Works. Adequate source capacity shall be demonstrated as required by the Department. The design of all such facilities and structures shall provide for access by maintenance vehicles.

6.2.2 Installation

A. Lines and Grades. The pipe shall be laid true to line with no visible change in alignment at any joint unless curved alignment is shown on the plans. No deflections shall be made at the pipe joints. When curved alignment is shown on the plans, the minimum radius of curvature and the maximum deflection at any joint shall not exceed the manufacturer's recommendation and shall be approved by the Department.

B. Trench Widths. The minimum trench width shall be the nominal diameter of the pipe plus 12-inches for all pipes 36-inches in diameter or less. All pipes greater than 36-inches diameter need special consideration and approval by the Department. The maximum trench width shall be the nominal pipe diameter plus 16-inches. However, in any case the width shall be ample to permit the proper installation of the pipe and appurtenances. Refer to U-4 series Standard Drawings for trenching and backfill requirements.

C. Excavation.

1. Depth. Water mains shall be installed at a depth which will provide a minimum cover over the top of the pipe measured from the finished grade. For lines 8-inches diameter or less, the minimum soil cover over the pipe shall be 36-inches. For lines greater than 8-inches in diameter, the minimum soil cover over the pipe shall be 48-inches.

2. Excavation. Unless otherwise specified, the excavation for water mains shall be an open trench excavated to 6-inches below the bottom of the pipe. The excavations for bells, collars, valves, and fittings shall be performed by hand, and the bedding material shall be hand-shaped so that the bottom segment of the pipe is firmly supported. It is the intent of these requirements to provide firm, uniform bearing for the pipe. Where the trench is in granular or sandy material, the pipe may be bedded in the native material in lieu of importing bedding material, providing it complies with the specification for bedding material. The Department shall determine the suitability of the native material.

   If soft, spongy, unstable, or similar other material is encountered upon which the bedding material or pipe is to be placed, additional material shall be removed below the normal trench bottom to a minimum depth of 1-foot, or as directed by the Department. The

resulting sub-trench shall be backfilled with sand bedding material suitably densified and be true to the designed line and grade.

Upon approval of the Department, horizontal boring or tunneling for short distances under roads, sidewalks, other utilities, etc. will be permitted.

3. Preparation of Pavement. When the trench is in an existing paved area, refer to Section 3.2.1.I for sawcut and pavement reconstruction requirements.

4. De-Watering. When water is encountered, the trench shall be kept free of water until the laying and jointing of the pipe and placing of the bedding material has been completed, inspected, and approved. No concrete footings, foundations, anchors, or thrust blocks shall be laid in water, nor shall water be allowed to rise over them until the concrete has set at least 12 hours. All water accumulating in the trench from any source whatsoever shall be removed. Waste water shall be disposed of in such a manner as will not cause any damage to public or private property and will not be a menace or inconvenience to the public. The manner employed to dispose of water pumped from an excavation shall be subject to the approval of the Department.

5. Excavated Material. Excavated material shall be piled in such a manner that it will not endanger the work and will offer minimum obstruction to traffic. Open trenches and waste piles shall be adequately barricaded and lighted.

6. Other Pertinent Regulations. All safety orders, rules, or recommendations of the Occupational Safety and Health Administration (OSHA) and the Division of Industrial Safety of the Department of Industrial Relations of the State of California, applicable to this work, shall be obeyed and enforced.

7. Bracing and Shoring. Trench walls shall be vertical, unless permitted otherwise by the Department in writing. Adequate shoring, as required by the Division of Industrial Safety of the State of California, to protect personnel, adjacent property, and roadway areas shall be installed through unstable material to limit trench width to the amount specified in these Standards. If any damage does result to such improvements, the necessary repairs or reconstruction required shall be made, as directed by the Department.

   The sheeting, shoring, and bracing shall be so arranged as not to place any stress on portions of the completed work until the general construction thereof has proceeded far enough to provide ample strength. Any damage to structures occurring through settlement, water or earth pressure, slides, caves, or other causes due to failure or lack of sheeting or bracing or improper bracing, or through negligence or fault in any other manner, shall be repaired immediately to the approval of the Department.

   Where timber sheeting extends below the invert of a pipe, it shall be cut off at the top of the pipe and the upper portion removed without harming the support conditions. This requirement will not be necessary where steel sheeting is used for shoring below the invert of the pipe.

   Care shall be exercised in the drawing or removing of sheeting, shoring, bracing, and timbering to prevent the caving or collapsing of the excavation faces which are being supported.

D. Laying Pipe. Pipe shall be laid in accordance with the manufacturer's specifications. All PVC pipe and fittings for water mains shall be installed in accordance with AWWA C-900. The following sequence shall be used:

1. Each section of pipe and each fitting shall be thoroughly cleaned before it is installed. All pipe, fittings, valves, etc. shall be carefully lowered into the trench by suitable tools or equipment in such manner as to prevent damage to the pipe, lining, coating, fitting, or other appurtenances. Under no circumstances shall pipe or accessories be dropped into the trench.
2. Whenever pipe laying is discontinued for short periods or when work is stopped at the end of the day, the open ends of all mains shall be closed with water-tight plugs or bulkheads. The plug or bulkhead shall not be removed unless for final connection.
3. Gate valves shall be set plumb, supported on a concrete base in accordance with Standard Drawing W-3, and properly fitted to the adjacent sections of main. A valve box shall be installed over each valve.
4. Fire hydrants shall stand plumb, with the steamer nozzle, if any, facing the street and in accordance with Standard Drawing W-2.
5. Ductile Iron Pipe. All ductile iron pipe shall meet the requirements of AWWA Standard C151. Any defective, damaged, or unsound pipe shall be rejected. Each section of ductile iron pipe shall be lowered into the trench by means of approved slings and the pipeline assembled piece by piece. Where necessary to properly locate valves and fittings, the pipe shall be neatly and squarely cut to length. Field repair of cement-mortar lining shall be required. After the pipe or fitting has been lowered into the trench, all foreign matter shall be completely brushed from the bell and spigot end before assembly.

E. Bedding Material. Bedding material shall be approved by the Department and meet the minimum standards for sand equivalent and gradation listed below:

Sand Equivalent = 20

Gradation Requirements for Bedding Material

Sieve Size	Percentage Passing Sieve
1"	100
No. 4	80-100
No. 200	0-15

The sand equivalent of 20 shall also be required outside of the roadway. Imported sand bedding shall be used the full length of the buried pipe.

Bedding material shall be placed and compacted to 90-percent relative compaction on the sides and to the minimum of 6-inches above the pipe. Water consolidation by flooding or jetting shall only be used by written permission of the Department. Hand tamping may be supplemented by the use of vibratory or other compaction equipment

provided that the equipment used is approved by the Department and does not strike, move, or damage the pipe while in the process of compacting.

F. Trench Backfill. Trench backfill shall comply with the following requirements:

1. Tracer Wire. Fourteen (14) gauge insulated copper tracer wire shall be laid in the trench above the pipe and branched to all water service laterals, fire hydrants, and air relief valves. The tracer wire shall be brought to finish grade through all meter boxes and valve access boxes. At fire hydrants, the tracer wire shall be brought to 6-inches above finish grade and secured to the hydrant bolt flange.

2. Warning Tape. In addition to the tracer wire, non-detectable warning tape shall be placed above the pipe and tracer wire to alert workers to the presence of the pipe and/or tracer wire during future trenching operations. The tape shall be 3-inches wide polyethylene, APWA uniform color-coded blue, permanently printed "CAUTION BURIED WATER LINE BELOW."

3. Placement. The tracer wire and warning tape shall be located as shown on the U-4 series Standard Drawings, or as directed by the Department. Tracer wire and/or warning tape shall be replaced if damaged by any subsequent trenching operation.

4. Minimum Cover for Water Lines. For lines 8-inches diameter or less, the minimum soil cover over the pipe shall be 36-inches. For lines greater than 8-inches in diameter, the minimum soil cover over the pipe shall be 48-inches. All trenches shall be backfilled for the full width of the trench, including joints, after pipe, fittings, appurtenances and bedding material have been installed, and before the required pressure and leakage tests are performed.

5. Other Requirements. Trench backfill for water line installation shall comply with the requirements shown in the U-4 series Standard Drawings.

G. Connection to Existing Mains. Existing mains shall not be shut down after 10:00 a.m. for the purpose of tie-ins. No tie-ins shall be performed on standard holidays. Prior to any shut down for a tie-in, the following must be performed.

1. All encroachment permits and rights-of-entry shall be obtained.

2. Three (3) working days' prior notice shall be given to the water service agency and affected customers.

3. All necessary materials shall be on site and fully assembled.

4. The point of the tie-in shall be fully exposed.

Direct connection to the existing water system shall not be permitted until the newly installed portion has passed bacteriological testing. Separation may be achieved by the installation of a blind flange or "pancake" inserted between the new and existing piping per Standard Drawing W-8.

H. Service Lines. The water main shall be tapped at the service location shown on the approved plans and a service line extended to the property line. Each service line shall be equipped with a corporation stop at the main and a curb stop at the property line. The service line may

be either laid in open cut or placed by boring or jacking. If installed by the open cut method, the trench shall be in accordance with these Standards and shall be completely backfilled with sand. The water service line shall be considered as part of the main for the purpose of the hydrostatic test as specified below. When a new water main is being installed, all new water services shall be installed at that time.

6.2.3 Testing

Pressure and leak tests shall be performed at the same time. Pressure testing against valves shall not be allowed. Separation may be achieved by the installation of a blind flange or "pancake" inserted between the new and existing piping per Standard Drawing W-8. The contractor shall give the Department two (2) working days' notice prior to testing.

A. Pressure and Leak Testing. After the pipeline has been laid, it shall be filled with water for a minimum of 24-hours and then subjected to a hydrostatic pressure test. Unless otherwise specified, the test pressure shall be 200 psi, or 50 psi greater than the rated pressure of the pipe (measured at the lowest elevation of the system), whichever is greater. The pressure test will be conducted after backfilling has been completed but before placement of permanent paving. A test shall be conducted only after all backfilling has been completed and at least 36-hours after the last concrete thrust block or reaction backing has been cast with high-early-strength concrete or at least seven days after the last concrete thrust block or reaction backing has been cast with standard concrete. The duration of the test shall be 2-hours unless otherwise directed by the Department. All pressure gauges shall be approved by the Department.

During the filling of the pipe and before the application of the specified test pressure, all air shall be expelled from the pipeline – if necessary, by means of taps at points of highest elevation, and after completion of the test, the taps shall be tightly plugged unless otherwise specified. During the test, all exposed pipe, fittings, valves, hydrants, and PVC couplings shall be carefully examined. Any joint at which the accumulated leakage exceeds the allowable rate specified in the table below shall be rejected. All cracked or defective elements shall be removed and replaced immediately. The test shall then be repeated until the results are satisfactory to the Department.

Allowable Leakage per 1,000 feet or 50 joints (U.S. Gallons per hour)

Nominal Pipe Size (inches)	Average Test Pressure (psi)		
	150	200	250
6	0.50	0.57	0.64
8	0.66	0.76	0.85
10	0.83	0.96	1.07
12	0.99	1.15	1.28

No pipe installation shall be accepted until or unless the leakage for the section of the line being tested is less than the rate specified in the table. In calculating the leakage, the Project

Engineer will allow for the number of joints added to the pipeline, owing to the use of pipe lengths smaller than 20-feet, for which the data in the table applies. If the test leakage in any section is greater than that permitted, the defective joints shall be located and repaired until the leakage is within the permitted allowance.

B. Flushing and Disinfecting. After the pressure test, the system should be thoroughly flushed out and disinfected in accordance with AWWA Standard C651 and the requirements of the Department's Procedural Memorandum O-3, a copy of which is in Appendix W.

Direct connection to the existing water system shall not be permitted until the newly installed portion has passed bacteriological testing. Separation may be achieved by the installation of a blind flange or temporary blocking device inserted between the new and existing piping per Standard Drawing W-8.

A disinfection plan shall be submitted to the Department for approval. Alterations or modifications of the sterilization procedures set forth herein shall be approved in writing by the County Water Quality Manager before they are implemented.

All flushing water shall be disposed of outside of the County Right-of-Way or as approved by the Department in conformance with Department requirements.

C. Fire Flow Testing. Fire flow testing shall be conducted by the Project Engineer in coordination with the applicable fire protection agency.

6.2.4 Replacement of Road Surfaces

A. Timing of Pavement Replacement. Paving replacement shall not proceed until the full requirements of Installation and Testing, above, have been met to the satisfaction of the Department but in no less than ten (10) days after backfilling has been completed.

B. Pavement Replacement Requirements. The replacement of all pavement and shoulder surfaces shall be in conformance with Section 3 of these Public Improvement Standards as to materials and methods of construction.

Section 7. Wastewater Disposal

Sanitary sewer lines and appurtenances within County-operated special districts shall be constructed in accordance with the details shown on plans and specifications approved by the Department.

Where a sewer system in the unincorporated area of the County is to be operated and/or maintained by any public agency other than the County or local purveyor regulated by the State of California, the plans, specifications, and construction must be approved by both the Department and by that entity. In the event of any discrepancy or conflict between these Public Improvement Standards and the requirements of said wastewater service purveyor, that entity's requirements shall take precedence.

7.1 Design Standards

7.1.1 Quantity of Flow

A. Average Flow Rate. An average flow of 100-gallons per person per day shall be used for design purposes with the peak flow double the average flow. Pipes shall be sized to handle peak flows with the pipe flowing half full for sewers up to 15-inches in diameter. Larger sanitary sewers shall be designed to flow 3/4 full.

B. Number of Persons Served. Accurate population estimates will be required to determine the quantity of flow. Multiply the future population by the average per capita wastewater flow, given in (A) above. Estimates of the number of visitors associated with recreational uses, which experience high seasonal fluctuation, can be converted to equivalent full-time residents by multiplying the number of visitors by the appropriate multiplier below:

Day-use visitor	0.1 – 0.2
Seasonal visitor	0.5 – 0.8

The number of persons shall be determined for a 50-year period, which is the length of time that the capacity of the sanitary sewer will be adequate. Day-use visitors are those who do not stay overnight (for example, boating or picnicking), and seasonal visitors are those who stay for short multi-day stays during peak recreational seasons (for example, camping or cabins).

7.1.2 Collection System

A. Minimum Velocity. Sanitary sewer grades shall be designed to provide a minimum velocity of 2 fps when flowing at peak discharge as determined in section 7.1.1.A, above. The minimum velocity requirement is necessary to prevent the deposition of solids. The following table indicates the slopes which will provide that velocity, and these shall be used as the minimum standard for design.

Minimum Slope for Sanitary Sewer

Diameter (inches)	Slope in Feet/Foot
6	0.0050
8	0.0035
10	0.0025
12	0.0020
15	0.0015
18	0.0012
House service line	0.02

Sewers larger than 18-inches diameter shall be designed to the approval of the Department.

B. Change in Pipe Size or Angle Point. Whenever a change in the size of the pipe or an angle of 20-degrees or greater in alignment occurs, the flowline of the pipe flowing into the manhole shall be a minimum of 0.17-feet above the flowline of the pipe flowing from the manhole or an amount necessary to match the inside crowns of the pipe, whichever is greater.

C. Maximum Velocity. Unless special provisions for erosion protection have been provided and approved by the Department, design velocities for sanitary sewers shall not exceed 10 fps at peak flow. The maximum design discharge shall not exceed the flow at critical slope and velocity. Sanitary sewers should not be designed for flow conditions at critical slope and velocity.

D. General Location. Sewer lines shall be installed in accordance with Standard Drawing U-1 where possible. See U-series Standard Drawings for special construction requirements when sewer lines are to be placed in close proximity with water lines.

E. Locate Sewers Within Streets and Roads. All sanitary sewers designed for the collection and conveyance of domestic sewage and/or industrial wastes shall be constructed and installed within Right-of-Way dedicated for public streets or roads unless such construction or installation is determined to be impractical by the Department. The location of the sanitary sewers installed in any street or road not having frontage roads shall normally be 6-feet southerly or easterly of the centerline of the street.

F. Sewer Lines Within Easements. Where sewer lines are located within easements, the easements shall be offered for dedication to the public. The minimum width of any easement for sanitary sewer purposes shall be 10-feet. In special cases of terrain, depth of sewer line, etc., the required easement width shall be increased. All easements shall include right of ingress and egress over adjoining property for maintenance, replacement and operation.

G. Alignment. Sewerage systems shall be designed so as to have a minimum of curvature, both horizontal and vertical. Whenever possible, sewer lines shall be laid out in a straight line between structures. Curved sewer lines will be allowed only under the following conditions:

- All curve data shall be shown on the plans.
- Minimum radius of curvature shall be as recommended by the pipe manufacturer and approved by the Department.

- No deflections shall be made at the pipe joints.

H. Depth. The normal design depth of a sanitary sewer system shall be such as to obtain a cover of 36-inches above the top of pipe for the house service lateral at the property line. Sewer mains shall be placed with 48-inch minimum cover and shall be located deeper than any nearby potable or reclaimed water mains.

I. Size. The normal minimum sewer main size shall be 8-inches inside diameter.

7.1.3 Areas of Conflict between Sewer and Water Lines

In the interest of public health and to minimize the possibility of contamination of the public water supply, the construction requirements included in Standard Drawing Series U-3 shall be met at any time that the separation between water and sewer lines is less than the basic separation standards contained in State regulations. These requirements apply to construction of a water main, sewer main, sewer lateral, or any other type construction causing the separation to be less than that indicated. All special construction required herein is to be discussed thoroughly with the Department and the Department of Public Health/Environmental Health Services prior to starting any work and is subject to Department approval.

7.1.4 Areas of Conflict between Sewer and Storm Drain Lines

In the interest of public health and to minimize the possibility of contamination of the drainage system and water course, at least four feet of clearance shall be maintained between parallel sewer lines and storm drains (and structures). Where either pipe is protected by concrete encasement, the separation shall be measured to the outside of the concrete encasement. Where maintaining the four feet of separation is not practical, special designs may be approved by the Department (via a Design Exception) to minimize the potential for cross contamination.

7.2 Construction Specifications

7.2.1 Materials

All material that is to become a permanent part of any sanitary sewer or appurtenant structure shall conform to the requirements for the particular material as set forth in these specifications. The Contractor shall supply any and all certificates of compliance, certified test results, or shall perform tests as required to assure the Department that the material being incorporated into the work has met the requirements as specified. Approval of the Department shall be required for use of material not listed in these standards.

A. Pipe. All sanitary sewer lines shall be ductile iron pipe, plastic PVC pipe, or approved by the Department. All pipe shall be of the size, material, and strength as shown on the plans. All pipe and fittings shall be marked or stamped with the trade brand name of the manufacturer and strength or class of pipe. All pipe shall be designed to withstand all internal or external loads applied. Supporting strength of conduits as installed to safely carry imposed gravity

loads and superimposed loads (including a suitable factor of safety) shall be determined by use of the Marston formula. Additionally, the following requirements apply for specific kinds of pipe:

1. Ductile Iron Pipe. All ductile iron pipe and fittings for main sewers shall conform to AWWA Standards C151 and C153. Joints shall be approved type mechanical joints. No lead joints will be allowed.
2. Polyvinyl Chloride (PVC) Pipe. PVC pipe must meet at least ASTM Standard D-3034/SDR 35. Deflection tests shall be required as prescribed by the Department.

7.2.2 Facilities

A. Manholes. Normal maximum spacing for manholes shall be 400-feet. Where the locations of two manholes are determined by intersecting lines, the distances between intervening manholes shall be approximately equal. A sewer on a curved alignment shall have manholes spaced at a maximum of 300-feet or adjusted to fit the individual case. The maximum spacing of manholes on trunk sewer lines shall be as follows:

Maximum Spacing of Sewer Manholes

Size of Trunk Sewer Line	Maximum Spacing
12" to 24" diameter	500-feet
27" to 36" diameter	600-feet

The spacing of manholes on trunk sewer lines larger than 36-inches in diameter shall be determined for each individual case.

B. Drop Manholes. Whenever the vertical distance between the inverts of sewer lines coming into a manhole exceeds 30-inches, a standard drop manhole shall be constructed. Designs requiring the use of drop manholes shall be avoided and shall require prior approval by the Department where they cannot be avoided.

C. Other Facilities. Other wastewater facilities shall conform to the following requirements:

1. Stub Lines. A flusher branch may be used in lieu of a manhole for any stub line with a length of 200-feet or less. Any line more than 200-feet in length shall have a manhole at the end.
2. Extension Lines. Lateral sewers installed to a subdivision line for future extension shall have a flusher branch at the end if there are any house service lines attached to it and if it is not over 200-feet in length. Lines longer than 200-feet shall terminate in a manhole with a stub for future extension.
3. House Service Lines. In all new subdivision work, the house service lines from the sewer to the property line shall be installed at the time the sewer is constructed. Each house service line shall be referenced to the plan stationing. Minimum size of any sanitary lateral or side sewer to serve individual residences, commercial structures, etc., shall be

nominal 4-inches inside diameter. Actual size of laterals larger than 4-inches shall be determined by fixture unit requirements as per the current edition of the California Plumbing Code.

D. Special Facilities. All special facilities such as lift stations, force mains, and treatment plants shall meet all requirements of the State Regional Water Quality Control Board, State and County Health Department, and the Department. Special structures, such as pump stations and pressure lines, shall require special considerations and approval by the Department. The design of all such facilities and structures shall provide for access by maintenance vehicles.

1. Lift Stations. The minimum distance from a lift station to any residence shall be 50-feet except with advance approval of the Department. No lift station shall be constructed with bypasses which will bypass any effluent into any stream or watercourse. An alarm system, which meets the approval of the Department, shall be provided on all sewage lift stations. In addition, all lift station controls shall be approved by the Department's Utilities Division operations staff. All lift stations shall have emergency power connections.

2. Lift Station and Force Main. Whenever the design of a sanitary sewage system includes the necessity of a sewage lift station and a force main, the following data shall be submitted for tentative approval before plans are submitted: Design computations for the pumps or ejectors, the type to be used, and a plot plan showing the dimensions of the site and its location with respect to homes or other structures The operating velocity in the station piping and the force main shall be maintained between 4.0 fps and 6.0 fps. Other operating velocities may be considered by the Department subject to the Design Exception process (see Section 1.2).

3. Force Mains. Pipe used in the construction of force mains shall be either ductile iron pipe or C200 (DR14 per AWWA C900) plastic pipe.

7.2.3 Installation

A. Lines and Grades. All lines and grades will be set by the Project Engineer, and the Department shall be informed 24-hours in advance of the times and places at which work is to be done in order that lines and grades may be inspected and necessary measurements made with a minimum of inconvenience and delay. All stakes and marks, once set, shall be fully protected and preserved. Flow line elevations shall be established at all changes in grade and at 50-foot intervals.

B. Trench Widths. The maximum width of trench, measured at the top of pipe, shall be governed in all cases by the size of the pipe to be installed therein. Refer to Standard Drawing Series U-4 for trenching and backfill requirements. For pipe 36-inches in diameter or less, the trench width shall be the outside diameter of the pipe, plus 12-inches (6-inches each side of pipe). For pipe diameters greater than 36-inches, the trench width shall be the outside diameter of the pipe, plus 16-inches (8-inches each side of pipe). The sides of the trench shall be as nearly vertical as possible in the material through which it is passing. If the width of the trench at the ground surface becomes excessive, the Department may require solid sheeting and bracing.

C. Excavation. Unless otherwise specified, the excavation for sewer mains shall be completed in the same manner as described for water mains in Section 6.

D. Laying Pipe. Pipe shall be laid in accordance with the manufacturer's specifications. All PVC pipe and fittings for underground gravity sewers shall be installed in accordance with the requirements of ASTM Standard D2321 (as amended to date), Recommended Practice for Installation of Flexible Thermoplastic Sewer Pipe. The following sequence shall be used:

1. The pipe shall be laid in conformity to the prescribed line and grade and each pipe length checked to the grade lines. Three consecutive points shown on the same rate of slope shall be used in common in order to detect any variation from a straight grade. In case any such discrepancy exists, the work shall be stopped and the discrepancy immediately reported to the Department. In addition, a string line shall be used in the bottom of the trench to ensure proper alignment and grade.

2. Pipe shall be laid continuously upgrade with the bell of the pipe forward. Each length of pipe shall be laid on a firm bed and shall have a true bearing for the entire length. No wedging or blocking up of the pipe will be permitted.

3. Both bell and spigot shall be clean before the joint is made, and care shall be taken that nothing but the joint-making material enters the joints.

4. When, for any reason, pipe laying is discontinued for an hour or more, the open end of each line shall be closed with a close-fitting stopper.

5. The Contractor's attention is called to the required use of short lengths of sewer pipe to provide curves, flexibility, and prevent cracking or shearing failures. The use of short lengths of pipe is particularly required for, but not necessarily limited to, these locations: (1) inlets and outlets to all manholes and (2) vertical and horizontal curvilinear sewers.

E. Pipe to be Placed by Boring or Jacking. This work consists of placing cast iron pipe or other pipe of approved material, usually in a conductor pipe, under a paved roadway or railroad to a true line and grade as shown on the plans by means of boring or jacking operations. The equipment and method of operation shall be approved by the Department before proceeding with the work and shall meet the following requirements:

1. The excavation for the boring operation shall be kept to a minimum but shall be of sufficient dimensions to satisfactorily complete the work. If so required, bracing and shoring shall be provided to adequately protect the workers and the roadway or railroad.

2. The conductor pipe shall be placed closely behind and in conjunction with the boring operation. The bored hole shall be not more than 2-inches in diameter larger than the conductor pipe. Guide rails shall be accurately set to line and grade so as to achieve close adherence to the line and grade shown on the plans.

3. The pipe to be placed inside the conductor pipe shall have non-rigid joints and shall be installed by the use of suitable centering devices. Sand or other approved material shall then be pumped into the conductor pipe to completely fill the annular space around the pipe for its full length.

F. Trench Bedding and Backfill. Trench bedding and backfill shall be placed in the same manner as described for water mains in Section 6, including use of tracer wire and warning tape, except as follows: The non-detectable warning tape shall be 3-inch wide polyethylene, APWA uniform color-coded green, permanently printed "CAUTION BURIED SEWER LINE BELOW."

G. Manholes. Manholes shall be watertight structures constructed by placing precast concrete sections on a poured concrete base. Poured-in-place manholes shall not be used unless specifically called for in the Special Provisions. The following requirements shall apply:

1. Temporary covers of 3/8-inch steel plate of sufficient size to adequately cover the opening shall be placed on the cone until the pavement is completed. Suitable locating ribs shall be welded to the underside of the cover to hold it in place during the grading and paving operations.

2. When adjusting an existing manhole to grade and the total depth of the throat, from the top of the frame to the bottom of the throat, exceeds 24-inches, the upper portion of the manhole shall be removed to the first full-size manhole section. The upper portion shall then be reconstructed as outlined above.

3. Manholes shall be tested for water tight integrity either jointly with testing of sewer line or as separate units in accordance with the Testing specifications in section 7.2.4 below. The allowable leakage for one manhole shall not exceed one (1) gallon during a two-hour test period.

H. Connection to Existing Manholes. Connections to existing manholes shall conform to the requirements of Standard Drawing S-1 and shall be made by coring a hole in the wall of the manhole, inserting the end of the pipe through the opening, flush with the inside wall, and packing the opening around the pipe with a non-shrink grout, thoroughly compacted to form a watertight connection. The grout shall be troweled smooth and flush with the interior surface of the manhole. A manhole adapter or water stop shall be placed on the pipe prior to placement in the hole, and the pipe shall be installed as specified by the manufacturer. Channelizing of the flow through the manhole shall conform to the details shown on the Standard Drawings for new manholes. The Contractor shall notify the Department, 24-hours in advance, of any connection being made to existing structures. The Contractor shall schedule the work so that interruption of flow is held to a minimum.

I. House Service Laterals. House service laterals shall be constructed as shown on the Standard Drawing S-3 and S-3a and shall conform to the following requirements:

1. If it becomes necessary to locate a house service lateral less than 100-feet from a well, it shall be constructed of a suitable material approved by the Department and the Department of Public Health /Environmental Health Services. Approved construction materials for sewer lines in critical zones are listed in Section 7.2.1, above.

2. Whenever house service laterals are to be installed as part of the contract for the construction of the lateral sewer, the use of wye or tee saddles will not be permitted.

3. That portion of any house service lateral to be placed under an existing curb and gutter and/or sidewalk shall be done by tunneling. Cutting of the existing curb and gutter and/or sidewalk will not be permitted.

4. All house service laterals shall be considered as part of the lateral sewers for purposes of the hydrostatic test as set forth in Testing, below.
5. The location of house service laterals shall be permanently indicated by embedding the letter "S" in the curb directly above the line. In new subdivisions when the house service laterals are installed, before the curb is constructed, it shall be the sewer contractor's responsibility to place the "S" in the curb after it is poured. When house service laterals are constructed in existing easements or streets where curbing does not exist, a 2-inch by 2-inch by 36-inch maximum (2"x2"x36") construction grade redwood stake shall be driven in the ground to within two inches of the surface directly above the service line at the property line and an "S" stamped in the top. Every house service lateral shall be so marked before final acceptance will be given of any job.

7.2.4 Testing

Prior to final approval, all sewer lines shall be cleaned and tested for leakage by standard hydrostatic or low-pressure air test, for deflection by mandrel test, and for standing water/other debris by TV inspection. All cleaning and testing shall take place after all utilities are installed and up to, but not including when the final paving is completed. Any damage to the system during final paving and cleanup shall be corrected prior to final approval.

A. Cleaning. Prior to acceptance of any sewer line by the Department, the sewer line shall be cleaned with a Wayne-type sewer cleaning ball under hydrostatic pressure. Any stoppage, dirt, or foreign matter shall be removed from the lines. All materials and debris removed shall be collected and vacuumed out of the system at a manhole selected by the Department, and no debris shall be washed or otherwise deposited into the system.

B. Hydrostatic Test Procedure. A section of sewer line shall be prepared for testing by plugging the upper side of the downstream manhole and all openings in the upstream manhole except for the downstream opening. Where grades are slight, two or more sections between manholes may be tested at once. Where grades are steep and excessive test heads would result by testing from one manhole to another, test tees the full size of the main shall be installed at intermediate points so the maximum head on any section under test will not exceed 12-feet. The following sequence shall be used:

1. The section of sewer line prepared as above shall be tested by filling with water to an elevation 5-feet above the top of pipe at the upstream end of the test section or 5-feet above the existing ground water elevation, whichever is greater. The water should be introduced into the test section four hours in advance of the official test period to allow the pipe and joint material to become saturated. The pipe shall then be refilled to the original water level.
2. At the beginning of the test, the elevation of the water in the upper manhole shall be carefully measured from a point on the manhole rim. After a period of four (4) hours, or less with the approval of the Department, the water elevation shall be measured from the same point on the manhole rim and the loss of water during the test period calculated. If this calculation is difficult, enough water shall be measured into the upper manhole to

restore the water to the level existing at the beginning of the test and the amount added taken as the total leakage.

3. Should an initial test show excess leakage in a section of line, it is permissible to draw the water off and test the manholes that contained water. This test shall be made by plugging all the openings in the manholes and filling with water to the same elevation as existed during the test. The leakage from the manhole may be deducted from the total leakage of the test section in arriving at the test leakage. After the testing is complete, the manhole shall be waterproofed by grouting. Other approved waterproofing methods may be used if satisfactory to the Department.
4. The allowable leakage in the test section shall not exceed 500-gallons per mile, per 24-hours, per inch diameter of pipe tested at the 5-feet test head.
5. If it is necessary or desirable to increase the test head above 5-feet, the allowable leakage will be increased at the rate of 80-gallons for each foot of increase in head.
6. Test sections showing leakage in excess of that allowed shall be repaired or reconstructed as necessary to reduce the leakage to that specified above, and the line retested, after a minimum period of 24-hours during which no additional water shall be introduced into the line.

C. Air Test Procedure. Each section of sanitary sewer between two successive manholes shall be tested by plugging all pipe outlets with suitable test plugs. Air shall be slowly added until the internal pressure is raised to 4-pounds per square inch gauge (psig). The compressor used to add air to the pipe shall have a blow-off valve set at 5 psig to assure that at no time, the internal pressure exceeds 5 psig. The internal pressure of 4 psig shall be maintained for at least two minutes to allow the air temperature to stabilize, after which the air supply shall be disconnected and the pressure allowed to decrease to 3.5 psig. The time in minutes that is required for the internal pressure to drop from 3.5 psig to 2.5 psig shall be measured and the results compared with the values tabulated below.

Air Test Procedure

Pipe Diameter (inches)	Test Time (minutes)	Minimum Distance Between Manholes (feet)
8	4	340
10	5	260
12	6	230
15	7	170
18	9	150
21	10	120
24	11	110
27	13	100
30	14	90
33	16	80
36	17	70

Pipe Diameter (inches)	Test Time (minutes)	Minimum Distance Between Manholes (feet)
39	18	60
42	19	50

The above tabulated values shall be used for the respective diameter pipes except where the distance between successive manholes is less than the above tabulated values, or the pipe diameter is less than 8-inches, in which case the following formula will be used to determine the test time:

(1) $T = 0.000183\ d^2\ L$

T = test time (minutes)

d = inside diameter of pipe (inches)

L = distance between successive manholes (feet)

If the pressure drop from 3.5 psig to 2.5 psig occurs in less time than the above tabulated or calculated values, the pipe shall be repaired and, if necessary, replaced and re-laid at the Contractor's expense until the joints and pipe shall hold satisfactorily under this test. The Contractor shall furnish all labor, air test equipment, and all other materials for making the required air test at his or her own expense. After the sewer lines have been properly backfilled to a depth where additional backfilling will not disturb the position of the pipe, all or any sections that the Department may select may be tested. In no case shall the required minimum backfill be less than 4-feet above the top of the pipe before subjecting the line to the test. The Contractor shall supply all equipment, material and perform all tests as required prior to final approval.

D. Deflection Test. Following the placement and densification of backfill, and prior to the placing of permanent pavement, all pipe shall be cleaned and then mandrel measured for obstructions (deflections, joint offsets, and lateral pipe intrusions). A rigid mandrel, with a circular cross-section having a diameter of at least 95-percent of the specified average inside diameter, shall be pulled through the pipe by hand. The minimum length of the circular portion of the mandrel shall be equal to the nominal diameter of the pipe. Unless otherwise permitted by the Department, any over-deflected pipe shall be uncovered and, if not damaged, reinstalled. Damaged pipe lengths shall not be reinstalled but shall be removed from the work site. Any pipe subjected to any method or process other than removal, which attempts – even successfully – to reduce or cure any deflection, shall be uncovered, removed from the work site, and replaced with new pipe. The mandrel used shall be:

1. effective length not less than its nominal diameter
2. fabricated of steel
3. fitted with pulling rings at each end
4. furnished in a suitable carrying case labeled with the same data as stamped or engraved on the mandrel

5. rigid, nonadjustable, with an odd number of legs (9 legs minimum)
6. stamped or engraved, on some segment other than a runner, indicating the pipe material specification, nominal size, and mandrel OD

E. TV Inspection. For wastewater collection systems operated by the County, a TV inspection and report shall be required prior to acceptance.

F. Force Mains. Each section of pipe to be tested shall be slowly filled with water and all air expelled from the pipe. After the pipe has been filled, it shall be allowed to set for a period of not less than 24-hours. The pipe shall then be refilled to the original water level and subjected to a pressure of not less than 150-pounds per square inch or the service pressure plus 50-pounds, whichever is greater, for a period of 2-hours. All exposed joints, bends, angles, and fittings shall be closely examined during the test. Any part of the line which proves to be defective shall be replaced and the line retested. The maximum allowable leakage shall not exceed 100-gallons per mile, per 24-hours, per inch of nominal diameter.

7.2.5 Replacement of Road Surfaces

A. Timing of Pavement Replacement. Paving replacement shall not proceed until the full requirements of Installation and Testing, above, have been met to the satisfaction of the Department, but in no less than ten (10) days after backfilling has been completed.

B. Pavement Replacement Requirements. The replacement of all pavement and shoulder surfaces shall be in conformance with Section 3 of these Public Improvement Standards as to materials and methods of construction.

APPENDICES

These notes are subject to change. Please check the Department website to confirm you have the most current version.

A1: General Notes

A. No construction shall be started without plans approved by the Department of Public Works (Department). The Department shall be notified at least 24-hours prior to starting of construction and of the time and location of the preconstruction conference. Any construction performed without approved plans or prior notification to the Department may be rejected and will be at the contractor's and/or owner's risk.

B. For any construction performed that is not in compliance with plans or permits approved for the project, the Department may revoke all active permits and recommend that County Code Enforcement provide a written notice or stop work order in accordance with Section 22.52.190 [or 23.10] of the Land Use Ordinance.

C. All construction work and installations shall conform to the most current County's Public Improvement Standards, and all work shall be subject to the approval of the Department.

D. The project owner and contractor shall be responsible for providing and/or maintaining all weather access at all times to existing properties located in the vicinity of work. Additionally, they shall be responsible for maintaining all existing services including utility, garbage collection, mail distribution, etc., to all existing properties located in the vicinity of work.

E. On-site hazards to public safety shall be shielded by construction fencing. Fencing shall be maintained by the Developer and Contractor until such time that the project is completed and occupied, potential hazards have been mitigated, or alternative protective measures have been installed.

F. Soils tests shall be done in accordance with the County's Public Improvement Standards. All tests must be made within 15-days prior to the placing material. The test results shall clearly indicate the location and source of the material.

G. Roadway compaction tests shall be made on subgrade material, aggregate base material, and material as specified by the soils engineer. Said tests shall be made prior to the placement of the next material lift.

H. Subgrade material shall be compacted to a relative compaction of 95-percent in the zone between finished subgrade elevation and a minimum of 1-foot below. All material in fill sections below the zone mentioned above shall be compacted to 90-percent relative compaction.

I. A registered civil engineer shall certify that the improvements, when completed, are in accordance with the plans prior to the request to the Department for a final inspection. Record Drawings shall be prepared after construction is completed. The civil engineer certifying the improvements and preparing as-built plans should be present when the final inspection is made by the Department.

J. An Engineer of Work Agreement and an Engineer Checking and Inspection Agreement are required prior to the start of construction. The Department shall be notified in writing of

any changes to the Engineer of Work Agreement. Construction shall not proceed without an Engineer of Work.

K. All relevant utility companies shall be notified prior to the start of construction.

L. An encroachment permit issued by the Department is required for all work done within the County Right-of-Way. The encroachment permit may establish additional construction, utility, and traffic control requirements.

M. The encroachment inspector, acting on behalf of the Department, may require revisions in the plans to solve unforeseen problems that may arise in the field. All revisions shall be subject to the approval of the Developer's Engineer of Work.

N. The structural section shall be based on soils tests taken at the time of construction and using a Traffic Index of _____ for _____ (road name). The structural section shall be approved by the Department prior to road construction.

O. Hydro-seeding or other permanent erosion control shall be placed and established with 90-percent coverage on all disturbed surfaces (other than paved or gravel surfaces) prior to the final inspection.

P. For any public improvements to be maintained by the County, if environmental permits from the U.S. Army Corps of Engineers, the Central Coast Regional Water Quality Control Board/State Water Resources Control Board, or the California Department of Fish and Wildlife are required, the Developer shall:

   1. submit a copy of all such completed permits to the Department, or
   2. document that the regulatory agencies determined that said permit is not required, prior to acceptance of the completed improvements for County maintenance and release of improvement security. Any mitigation monitoring required by said permits will remain the responsibility of the Developer.

Q. When the project site earthwork is not intended to balance, a separate grading permit for the sending or receiving property may be required. A copy of the permit/s or evidence that no permits are required shall be submitted to the Department prior to commencing project earthwork.

In addition, the following note should be placed on utility improvement plans:

All wire and gas utility connections, distribution lines, and service locations shown on these plans are for information only and should not be considered final designs. Utility purveyors may need to alter their design from what is depicted herein based upon future design modifications or during construction. This may result in additional redesign costs or charges to the owner for this work. No revisions to what are depicted herein shall be constructed without the prior approval of the County of San Luis Obispo Department of Public Works. No above-ground facilities shall be located where they block the accessible path of travel or intersection or driveway sight distance. Prior to final project acceptance, it will be the owner's responsibility to verify final utility alignments and ensure that adequate easements for such facilities are provided.

These notes are subject to change. Please check the Department website to confirm you have the most current version.

A2: Erosion Control Notes

A. Sediment and erosion control Best Management Practices (BMP) shall be implemented on all projects at all times and shall include: pollutant source control, protection of stockpiles, protection of slopes, protection of all disturbed areas, protection of site access points, and perimeter containment measures.

B. Appropriate BMP shall be installed prior to the commencement of grading and site disturbance activities. The intent of the BMP shall be to prevent disturbed sediment from entering drainage conveyances, generating fugitive dust, or migrating onto adjacent properties or the public Right-of-Way.

C. Site inspections and appropriate maintenance of all BMP and erosion control measures shall be conducted and documented throughout construction and especially prior to, during, and after rain events.

D. The Developer shall be responsible for the installation and maintenance of all BMP as specified by the approved Erosion and Sediment Control plan until such time that the project is accepted as complete by the County or until the California Construction General Permit for Stormwater Discharge Notice of Termination is approved by the State Water Resources Control Board.

E. Erosion control BMP may be relocated, modified, or added depending on field conditions encountered during construction. Additional BMP shall be installed at the discretion of the site superintendent, Engineer of Work, County Inspector, Qualified SWPPP Practitioner (QSP), or State Water Resources Control Board. Guidelines for installing appropriate erosion control devices shall be included in the plans with additional measures/devices noted.

F. Sediment and erosion control BMP shall be available, installed, and/or applied prior to commencement of construction, installed appropriately as construction progresses, and maintained in operable condition until final stabilization of the site is achieved. Sediment and erosion control BMP are required year-round.

G. Wet Weather Preparation: The Contractor, Developer, and Engineer of Work shall be responsible to review the condition of the project site prior to October 15 (rainy season) and to coordinate an enhanced BMP implementation plan for wet weather conditions. A locally based standby crew for emergency work shall be available at all times during the rainy season (October 15 through April 15). Necessary materials shall be available and stock piled at convenient locations to facilitate rapid maintenance or repair of the BMP throughout the rainy season.

H. In the event of a failure, the Developer and/or his representative shall be responsible for cleanup and all associated costs or damage. In the event that damage occurs within the Right-of-Way and the County is required to perform cleanup, the owner shall be responsible for County reimbursement of all associated costs or damage.

I. In the event of repeated failure and/or lack of performance by the Developer and/or Contractor to correct sediment and erosion control related problems, the Department may revoke all active permits. The County may issue a written notice or stop work order in accordance with Section 22.52.190 or 23.10 of the Land Use Ordinance. Daily penalties may be assessed by County Code Enforcement for failure to comply.

J. Final stabilization of the site shall be established on all disturbed surfaces prior to final acceptance. Where vegetation is used for final stabilization, vegetation must be mixed and applied in accordance with the below table and specifications. Temporary erosion control measures shall remain in place until final stabilization is achieved.

Hydroseed Mix for Stabilization

Species	Pounds per Acre
California Brome (*Bromus carinatus* "Cucamonga")	12 lbs/ac
Small Fescue (*Festuca microstachys*)	5 lbs/ac
Tomcat Clover (*Trifolium willdenovii*)	2 lbs/ac
California Poppy (*Eschscholzia californica*)	1.5 lbs/ac
Sky Lupine (*Lupinus nanus*)	2 lbs/ac
Goldfields (*Lasthenia californica*)	0.5 lb/ac

Install seed mix at rate of 23 pounds per acre on all disturbed, uncompacted soils. Incorporate compost, fiber, and tackifier per applicator specifications based on site slope and soil type.

K. The County Air Pollution Control District (APCD) may have additional project specific erosion control requirements. The Contractor, Developer, and Engineer of Work shall be responsible for maintaining self-regulation of these requirements.

L. If Construction General Permit for Stormwater Discharge enrollment is necessary, the Developer (or legally responsible agent) shall submit the required Permit Registration Documents to the State Water Resources Control Board and provide proof of enrollment to the County prior to commencement of construction activities. The project Waste Discharge Identification Number (WDID#) is: _____.

These notes are subject to change. Please check the Department website to confirm you have the most current version.

A3: Traffic Control Notes

A. The encroachment permit applicant shall be responsible to assure that the appropriate existing traffic controls remain in place and functional during all construction phases. The Contractor shall cover any conflicting signs that exist along the roadway.

B. No work shall commence without the construction signs installed and other necessary traffic control devices on site. Stationary mounted construction area signs shall be fluorescent orange, and all signage and markings must conform with the California Manual on Traffic Control Devices (CAMUTCD) requirements.

C. No lane closures are permitted on the roads and between the times listed in the Department's "Lane Closure Restriction List" (listed below).

D. At the conclusion of each workday, all paved traveled-way surfaces shall be restored to an all-weather, traversable condition. There shall not be a drop-off along the edge of traveled way >0.15-feet. "Low Shoulder" signs shall be placed along the traveled way where there is any drop-off. Drop-offs >0.15-feet shall require either:

   a. Backfilling the drop-off to a minimum 4:1 slope;

   b. Providing appropriate steel plates over excavation;

   c. Providing temporary concrete railing along the work zone in conformance with the State Standard Specifications.

E. Excavations beyond 10-feet from the edge of traveled way may utilize portable delineators at appropriate spacing along with "Open Trench" signs.

F. Where steel plates are used, they shall be pinned and have a cold-mix slope of 12:1 placed on all sides. For roadways with travel speeds over 40 mph, the existing pavement shall be milled and the steel plate set flush to the road surface. They shall be friction-coated for traction. Appropriate warning signs shall be placed in accordance with the CAMUTCD.

G. Pedestrian access shall be afforded through the work area on County streets and roads, either by providing necessary facilities for safe and viable access, or by providing appropriate CAMUTCD advance warning to pedestrians to use alternate routes. Bicycle routes and lanes, when impacted by construction, shall be signed to afford safe passage through the work zone or to designate alternate routes. For both pedestrians and bicycles, surfaces shall be maintained free of loose debris and gravel.

H. No construction equipment or materials shall be parked or stored within 10-feet of the edge of the traveled way. When construction equipment or materials are stored within the Right-of-Way, the shoulder area shall be signed as closed and portable delineators shall be used to mark a taper in advance of the material or equipment.

I. Removal of existing pavement striping or markings shall be by sandblasting or grinding. When the change of position will be greater than 2-feet, the removed striping shall be

further obscured by use of a Chip Seal, as required by State Standard Specifications. The Chip Seal shall extend the full width of the lane or roadway, or as directed by the Department.

J. Parking restrictions shall be posted 24-hours before any work starts. Posting shall be done by the Contractor.

K. All private driveways and side streets shall be kept open at all times, except when construction takes place immediately in front of the driveway or side street.

L. Any work that disturbs normal traffic signal operations shall be coordinated with the Department at least 3-business days prior to beginning the work involving the signal. The Contractor shall replace all traffic signal loop detectors damaged during construction, within 5-days of the completion of construction involving the signal. Any damage to existing in-pavement loop detectors will require replacement within 5-days of the start of any trench cut work. Intersection detection shall be replaced with video detection system(s) acceptable to the Department. All components shall be available on the job site prior to commencing the trench work which will affect the loop(s). All costs, including Department operations time, shall be paid by the Developer.

M. All delineators shall be equipped with nighttime reflective bands and spaced at no greater than 50-foot intervals along tapers, lane control, and/or edge of work zone.

N. The operator of any transit operation affected by the work shall be notified 2-working days prior to work commencing.

O. All flaggers shall hold current certifications. As defined under Cal OSHA Construction Safety Order Section 1599, all flaggers on the roadway shall be trained by qualified and experienced personnel to the aspects noted in Section 1599. The Developer or Project Engineer shall be responsible to ensure that the Contractor or other agents utilize trained personnel only. All workers within the roadway shall wear Type 2 CAL-OSHA high-visibility vests.

COUNTY LANE AND ROAD CLOSURE RESTRICTION LIST

County Road	No Closures Permitted Between:	
	Mornings	Afternoons
Avila Beach Drive[1,2]	0700-0830	1500-1800
Buckley Road	0700-0830	1500-1800
Burton Drive (SR 1 to Main St)	0700-0830	1500-1800
El Camino Real[1]	0700-0830	1500-1800
Foothill Road[1]	0700-0830	1500-1800
Halcyon Road[1] (A.G. to El Campo Rd.)	0700-0830	1430-1800
Higuera Street[1]	0700-0830	1500-1800
Hutton and Joshua Roads[1]	0700-0800	1600-1800
Las Tablas Road	0700-0830	1600-1800
Lopez Drive[1]	0700-0830	1600-1800
Los Berros Road	0700-0830	1500-1800
Los Osos Valley Road[1]	0700-0830	1500-1800
Los Ranchos Road	0700-0830	1430-1800
Main Street, Cambria	0730-0830	1430-1730
Main Street, Templeton	0700-0830	1600-1800
Nacimiento Lake Drive[1]	0700-0830	1600-1800
O'Connor Way	0700-0830 (unless off Cuesta College schedule)	
Orchard Avenue[1]	0700-0830	1600-1800
Pomeroy Road (Willow Rd to Tefft St)	0700-0830	1600-1800
Price Canyon Road[1]	0700-0830	1600-1800
San Luis Bay Drive[1]	0700-0830	1430-1800
Santa Ysabel Avenue	0700-0830	1700-1800
South Bay Boulevard[1]	0700-0830	1500-1800
South Frontage Road	0700-0800	1600-1800
Tank Farm Road	0700-0830	1600-1800
Tefft Street[1]	0700-0830	1430-1800
Thompson Avenue (Tefft St to US 101)	0700-0830	1430-1800
Valley Road	0700-0830	1500-1800
Vineyard Drive[1] (SR 46 to Main St)	0700-0830	1430-1800
Willow Road[1]	0700-0830	1600-1800

Notes:

1. Lane closures are not permitted on:
   - Weekends (Saturday and Sunday).
   - Federal holidays.
   - Fridays after 12:00 pm (noon) preceding Monday Federal holiday.
   - Any weekdays after 12:00 pm (noon) preceding a Federal holiday.
2. Lane closures require pre-approval from Diablo Canyon Power Plant to avoid shift change conflicts.

These notes are subject to change. Please check the Department website to confirm you have the most current version.

A4: Traffic Signal Plan Notes

When the installation and modification of any signal for the County of San Luis Obispo is proposed, the following notes must be included on the plans:

A. Special Inspection shall be required by a Certified Traffic Signal Inspector for all phases of the signal and lighting installation. A Schedule of Inspections shall be provided to the Department prior to commencing work. The Inspector's daily reports shall be provided to the Department prior to acceptance of the work and scheduling a turn-on of the new signal and lighting facility.

B. All work, material, and equipment shall conform to the latest adopted Standard Plans and Specifications of the State of California, Department of Transportation (Caltrans), and the Special Provisions.

C. A County encroachment permit shall be required to perform work within the County Right-of-Way. County approved plans do not relieve the contractor from the responsibility of obtaining an encroachment permit. A copy of the permit shall be kept on the construction site at all times.

D. The contractor shall be responsible for providing a detailed traffic control plan for any lane closures associated with the traffic signal construction.

E. The location of all existing underground utilities is approximate only. The contractor shall be responsible for verifying the exact location and depth of all utilities including those not shown on the plan prior to start of work. Contact Underground Service Alert at 811 at least 48-hours in advance.

F. The Developer shall be responsible for coordinating with Pacific Gas & Electric Company (PG&E) to have a power supply and meter installed.

G. The contractor shall be responsible for obtaining an Electrical Permit from the County's Planning Department for the service pedestal.

H. The contractor shall be responsible for obtaining all necessary permits and notifying affected agencies at least 72-hours prior to start of work.

I. The Conductor Schedule is furnished as an installation guideline only. It shall be the Contractor's responsibility to provide the appropriate number of conductors required for the intended operation.

J. All vehicle signal indications shall be 12-inches. The signal housing, backplates, and visors shall be metal. All signal indications shall be LED.

K. The Contractor shall provide the Department with a Certificate of Compliance from the manufacturer in conformance with the provisions of State Standard Specifications. The certificate shall certify that the LED signal modules comply with the requirements of these

specifications. The certificate shall also include a copy of all applicable test reports on the LED signal modules.

L. All pull boxes shall be No. 6 unless otherwise noted on the plans. Pull boxes shall not be located in or within 1-foot of any curb access ramp or driveway. All pull boxes and covers shall be concrete and shall be marked "Traffic Signal."

M. The contractor shall verify with the Department the exact location of all traffic signal equipment prior to installation.

N. The Contractor shall arrange to have a signal technician qualified to work on the controller unit and employed by the controller unit manufacturer or the manufacturer's representative present at the time the equipment is turned on.

O. All conduits shall be 3-inch unless otherwise noted. All stub-outs shall be 3-inch conduit. All conduits under roadway section shall be installed without open cutting.

P. Each conductor shall be permanently identified. Identification shall be by direct labeling, tags, or bands permanently fastened to the conductors. The identification shall be placed on each conductor or group of conductors in each pull box and near the end of each conductor where the conductors are terminated.

Q. Luminaires shall be LED, equivalent to standard 200W bulb, unless otherwise noted.

R. Internally Illuminated Street Name signs shall be Type "A" high-grade diamond reflective sheeting with minimum 8-inch lettering.

S. Retroreflective backplate borders may be required by the Department on the traffic signal head and shall meet CAMUTCD standards.

T. Underground traffic signal conductors shall not be spliced.

U. Any landscaping damaged by signal construction shall be repaired or replaced to the satisfaction of the Department and the property owner.

V. The contractor shall give the Department 48-hour notice prior to signal turn-on.

W. The contractor shall be responsible for completing all "punch list" items prior to signal turn-on.

X. The controller cabinet schematic wiring diagram and intersection sketch shall be combined into one drawing so that when the cabinet door is fully open, the drawing is oriented with the intersection.

Y. A maintenance manual shall be furnished for all controller units, auxiliary equipment, and vehicle detector sensor units, control units, and amplifiers. The maintenance manual and operation manual may be combined into one manual. The maintenance manual or combined maintenance and operation manual shall be submitted at the time the controllers are delivered for testing or, if ordered by the Department, prior to purchase. The maintenance manual shall include, but need not be limited to, the following items:

1. Specifications
2. Design characteristics

3. General operation theory
4. Function of all controls
5. Trouble shooting procedure (diagnostic routine)
6. Block circuit diagram
7. Geographical layout of components
8. Schematic diagrams
9. List of replaceable component parts with stock numbers

These notes are subject to change. Please check the Department website to confirm you have the most current version.

A5: County Maintenance Inventory Data Requirements

For any public improvement which is to be accepted for County maintenance, the Project Engineer shall submit records of the improvements to be accepted in the format listed below. Each new street shall have postmile control established, beginning at zero, based on increasing from west to east or from south to north. Existing streets shall be based on current postmile data provided by the Department. All intersections, culverts, bridges, and drainage inlets shall be referenced to the postmiles.

A. Roads and Controls
    1. Street Name
    2. Postmile
    3. Street Width (feet)
    4. Curb Gutter & Sidewalk (yes/no)
    5. Intersection Features
B. Drainage Systems
    1. Storm Drain Diameter (inches)
    2. Storm Drain Material
    3. Storm Drain Inlet Postmile
    4. Storm Drain Outlet Postmile
C. Catch Basin Type (D-2, etc.)
D. Drainage Basin
    1. Type of Drainage Basin (Surface shallow or deep, subsurface, etc.)
    2. Capacity of Drainage Basin (cubic feet)
    3. Fence Material
    4. Maintained by (HOA, County, Owner, etc.)
E. Signs/Markings
    1. Street Name
    2. Sign Type
    3. Road Markings
    4. Postmile
    5. Direction Facing (N, S, E, or W)

F. Map

1. AutoCAD© file with street centerline layouts and drainage layouts.
2. Provide GIS Shapefile(s) projected in the California State Plane coordinate system (Zone 5, feet) of the American Datum of 1983 (NAD 83) that include the project boundary, street centerline and drainage layouts. Each shapefile needs to include a Projection file (.prj) and be delivered compressed in a ZIP file format.

G. Permits – Copies of Facility Permits from the following regulatory agencies:

1. Corps of Engineers
2. Department of Fish and Wildlife
3. Regional Water Quality Control Board
4. Other regulatory agencies as determined necessary by project characteristics

These notes are subject to change. Please check the Department website to confirm you have the most current version.

C1: Concrete Mix Designations

All Portland Cement Concrete shall conform to latest adopted State Standard Specifications.

A. Whenever the 28-day compressive strength specified is greater than 3,600 psi, the concrete shall be designated by compressive strength. If the specified 28-day compressive strength is 4,000 psi or greater, an additional 14 days will be allowed to obtain the specified strength. If the 28-day compressive strength is 3,600 psi or less, it is given for design information only and is not a requirement for acceptance of the concrete.

B. Concrete with a 28-day compressive strength of 3,600 psi or less shall contain the minimum amount of cementitious material listed in C3.

C. Concrete with a 28-day compressive strength greater than 3,600 psi shall be proportioned such that the concrete will attain the strength required by the project plans and specifications.

D. Concrete for Department of Public Works contracts shall be specified on the project plans and in the project special provisions.

E. All portland cement concrete materials shall comply with the provisions of the State Standard Specifications, except that prequalification tests in conformance with California Test 549 will not be required for the construction types listed in C3.

These notes are subject to change. Please check the Department website to confirm you have the most current version.

C2: Compressive Strength Testing of Concrete

A. Public Improvements Constructed by Development Projects. For public improvements constructed by development projects, when the compressive strength of the specified portland cement concrete is greater than 3,600 psi, the prescribed compressive strengths shall be tested in accordance with the provisions of the State Standard Specifications. The Contractor shall maintain copies of test reports at the job site, which shall be available for review and inspection.

   1. Projects of 50 CY or More. One set of standard cylinders shall be collected from each day's run volume, for every lot and class of concrete. Additional cylinder sets shall be collected not less than once for every 150 CY of each concrete class.

   2. Projects Less than 50 CY. When the daily lot or class of concrete is less than 50 CY, a Certificate of Compliance, signed by the manufacturer, may be submitted in-lieu of standard cylinder tests. The Certificate of Compliance shall state the average compressive strength of each lot and that it complies in all respects with the requirements of the specifications. As is required in the State Standard Specifications, Certificates of Compliance for Portland cement concrete shall be furnished prior to use or placement of the material.

B. Curing Concrete. Curing concrete shall comply with the requirements of the State Standard Specifications.

C. Protecting Concrete. Protect all concrete surfaces in accordance with the requirements of the State Standard Specifications.

These notes are subject to change. Please check the Department website to confirm you have the most current version.

C3: Concrete Mix by Type of Construction

Type of Construction	Minimum Cementitious Material Content		Min. Compressive Strength at 28 days (PSI)
	lbs./CY	Sacks/CY	
Curb, Gutter, Sidewalk, Concrete Pavement, Alleys, Driveways, Curb Ramps, Cross Gutters and Spandrels	520	5-1/2	2,500
Extruded Curb, Curb and Gutter when using 3/8" aggregate	548	6	2,500
Pipe Collars, Pre-Cast Manhole Components, Catch Basins, Sidewalk Culverts, Utility Lid Collars	565	6	3,250
Side hill Surface Drainage Facilities	520	5-1/2	2,500
Pipe Bedding and Encasement Anchors, Thrust Blocks, Wall Support for Pipe	470	5	2,500
2 Sack Trench Backfill Slurry	188	2	-
Manhole Ring Support – Hydraulic cement grout, non-shrink, packaged dry (ASTM C1107)	-	-	7,000
Section 2.1.2I. Retaining Walls and footings not requiring a construction permit by Title 19 of the County Code	590	6-1/4	3,250
Channels and Boxes	590	6-1/4	3,250
Street Light and Traffic Signal Foundations, Survey Monuments	565	6	3,250
Fence and Guardrail Post Foundations	520	5-1/2	2,500
Concrete Not Otherwise Specified	565	6	3,250
Shotcrete (Wet Mix)	632	6-3/4	3,250
Coarse Masonry Grout	610	6-1/2	2,000

These notes are subject to change. Please check the Department website to confirm you have the most current version.

D1: Manning Formula "n" Values

Table 1: Street and Pavement Gutters

Type of Gutter or Pavement	Manning's "n"
Concrete gutter, troweled finish – greater than 0.5% slope	0.012
Concrete gutter, troweled finish – 0.5% or flatter	0.032
Hot Mix Asphalt pavement – greater than 0.5% slope	0.016
Hot Mix Asphalt pavement – 0.5% or flatter	0.036
Concrete gutter and Hot Mix Asphalt pavement combination – greater than 0.5% slope	0.015
Concrete gutter and Hot Mix Asphalt pavement combination – 0.5% or flatter	0.035

Table 2: Storm Drain Culverts

Type of Culvert	Roughness or Corrugation	Manning's "n"
Concrete pipe	smooth	0.012
Concrete boxes	smooth	0.013
Corrugated polyethylene	smooth	0.015
Corrugated polyethylene	corrugated	0.025
Polyvinyl chloride (PVC)	smooth	0.012

Table 3: Open Channel n-values for Given Depth Ranges

Lining Type	0-0.5 ft	0.5-2 ft	>2 ft
Concrete	0.015	0.013	0.013
Grouted riprap	0.04	0.03	0.028
Stone masonry	0.042	0.032	0.03
Soil element	0.025	0.022	0.02
Hot Mix Asphalt	0.018	0.016	0.016
Bare soil	0.023	0.02	0.02
Rock cut	0.045	0.035	0.025
Woven paper net	0.016	0.015	0.015
Jute net	0.028	0.022	0.019
Fiberglass roving	0.028	0.021	0.019
Straw with net	0.065	0.033	0.025
Curled wood mat	0.066	0.035	0.028
Synthetic mat	0.036	0.025	0.021
Gravel Riprap 1 inch D50**	0.044	0.033	0.03
Gravel Riprap 2 inch D50**	0.066	0.041	0.034
Rock Riprap 6 inch D50**	0.104	0.069	0.035
Rock Riprap 12 inch D50**	–	0.078	0.04

* Some "temporary" linings become permanent when buried.

** D50 = median aggregate diameter

These notes are subject to change. Please check the Department website to confirm you have the most current version.

D2: Geotextile Selection

Topsoil with soil amendments, fertilizer, and seed is required beneath all blanket liners. Seed shall be watered regularly until there is 70-percent successful coverage over the area planted. Additional seeding, watering, and amending, as needed, shall be completed immediately if, at any point during the rainy season, the initial planting fails or is removed or disturbed.

Geotextile blanket installation shall conform to the following requirements:

A. Temporary blankets shall be used only on mild to moderate slopes (less than 5-percent) and where Primary Design Storm flow velocities (intermittent) are less than 2.5-feet per second (fps).

B. Extended-term and permanent blankets shall be comprised of 100-percent biodegradable materials. Blankets that utilize photo-degradable netting are not permitted.

C. Extended-term blankets shall be used on steep slopes (5-percent to 10-percent) where intermittent flow velocities exceed 2.5 fps in sand or 4.0 fps in gravel and where the establishment of adequate vegetation is delayed.

D. Permanent blankets shall be used on steep to severe slopes (greater than 10-percent) where intermittent flow velocities exceed 2.5 fps in sand or 4.0 fps in gravel.

E. Trapezoidal or parabolic channel cross-sections are preferred over V-sections. V-sections shall not be used where intermittent flow velocities exceed 2.5 fps in sand or 4.0 fps in gravel.

F. Geotextile blankets shall be installed in firm and continuous contact with the soil.

G. Blankets shall be longitudinally lapped or anchor trenched and installed according to the manufacturer's detailed installation requirements.

H. Blankets shall be inspected, maintained, and repaired until they have become vegetated and stable.

These notes are subject to change. Please check the Department website to confirm you have the most current version.

E1: Multiuse Path Requirements on County Right-of-Way

Clearance and maintenance requirements shall be established on County Right-of-Way as follows:

There shall be a minimum lateral clearance of 8-feet, and a vertical clearance 12-feet in height. These clearance requirements shall apply to both sides of all such County roadways which are designated trail routes in the County Trails Plan. Under this policy, property owners may not place or maintain any obstructions within the clearance areas.

Pedestrian and equestrian paths shall be maintained free of all encroachments, including but not limited to landscaping, other vegetation, fences, or other obstructions which would restrict the passage of pedestrians and equestrians along the County Right-of-Way unless an encroachment permit is issued under the provisions of Chapter 13.08 of the San Luis Obispo County Code. Property owners are allowed to plant ground cover, or cover the area with mulch or other material which will retard soil erosion, provided that said material can be walked or ridden upon.

Procedure. Following is the adopted procedure (Resolution No. 2003-412) for implementing the Policy Establishing Clearance Requirements for County Right-of-Way (hereafter, "Clearance Requirements Policy"):

1. Neighbors/community members experiencing obstructions which are in violation of the Clearance Requirements Policy may contact the property owner (where the obstruction is occurring) and request that the owner move or remove the obstruction. The neighbors/community members may offer their assistance.
2. If the property owner is agreeable, no correspondence with the County is necessary. If the owner refuses to move or remove the obstruction, the neighbors/community members contact Department of Public Works encroachment staff at pw.permits@co.slo.ca.us. A brief letter indicating the nature and location of the problem should be provided by the neighbors/community members.
3. The Public Works Department will review the situation (perform a site visit and determine the Right-of-Way width in this area). A letter is written to the property owner from the Department of Public Works (citing the safety issue and the Clearance Requirements Policy) with a request that the property owner move or remove the obstruction by a certain date. The assistance of the neighbors/community members may be offered.
4. If the Department of Public Works determines there is no concern, a letter is sent to the neighbors/community members indicating the property in question has been reviewed and found not to be in violation of the Clearance Requirements Policy.
5. If the property owner does not remove the obstruction by the date requested, a second letter is sent to the property owner (from the Department of Public Works), indicating the obstruction will be removed at the property owner's cost. The date this will occur is specified in the letter. The obstructions are then removed by County staff as designated in the County

letter and the property owner is billed for this action. Prior to any obstructions being removed or the property owner billed, the property owner will have the ability to appeal the Director of Public Works' decision to the Board of Supervisors. (Reference: Sections 1480 et seq. Streets & Highways Code).

These notes are subject to change. Please check the Department website to confirm you have the most current version.

E2: Encroachment Permit Information

An encroachment permit is a permit which allows people to work within or use the County Right-of-Way and is required prior to an activity affecting access (e.g. construction, events, etc.) taking place in the County Right-of-Way.

To receive an encroachment permit, the applicant must first submit an encroachment permit application, pay the fee, and may be requested to post a damage bond security. The Department will process the application and either approve, conditionally approve, or deny the request, typically within one week of receipt. After the permit is issued you may commence with the permitted activity.

If questions arise during the performance of work, a field inspection can be scheduled with our encroachment field inspector by calling 805-781-5252. Once the work is complete, a final inspection will be performed to determine if the work meets County Standards. If it is determined that the work meets the County Standards, the project will be finalized and the process of exonerating the damage bond begins, if applicable.

Additional information is available on the County of San Luis Obispo Department of Public Works website or by contacting the Department at 805-781-5252, or pw.permits@co.slo.ca.us.

Web	Category	File Name	Description
Yes	Encroachment Permit	ENC App Prov.docx	Standard Provisions for encroachment permits
Yes	Encroachment Permit	ENC App.docx	Encroachment permit application
Yes	Encroachment Permit	ENC PCI Rpt.xlsx	Pavement Condition Index for County Roads
Yes	Encroachment Permit	ENC Restrict Rd List.docx	List of County roads with restricted hours of work (lane and road closures, shoulder closures okay)
Yes	Encroachment Permit	ENC Trans App Annual.docx	Transportation Permit application for annual permits. Single vehicle, multi-trip
Yes	Encroachment Permit	ENC Trans App Prov.docx	Standard Provisions for Transportation Permits
Yes	Encroachment Permit	ENC Trans App Single.docx	Transportation Permit application for single trip permit

This form is subject to change. Please check the Department website to confirm you have the most current version.

F1: Design Exception Request Application

COUNTY OF SAN LUIS OBISPO
Department of Public Works

PUBLIC IMPROVEMENT STANDARDS DESIGN EXCEPTION REQUEST
(not applicable for ADA Design Exceptions)

Date: _____

Project Name: _____

Project APN: _____

Community: _____

Project Engineer: _____

Road Information: *(completed by Public Works)*

Road Name	Road No.	Forecast ADT	Req. Road Std.	Collision/mm	RSA

Design Engineer Required Submittal: *(completed by the Engineer of Work. Use as much space as necessary)*

1. Proposed Project and Existing Site Conditions.

2. Project Conditioned or Required Design Standards.

3. Proposed Alternative Design Standards.

4. Reasons for Requesting Design Exception.

5. Determination that the proposed alternative provides the same level of service, approximately the same estimated maintenance costs, and is not adverse to public health, safety and welfare.

6. For the reasoning and professional judgment indicated above, I recommend this design exception be approved by the Public Works Department.

_____ Date: _____ *stamp*

Project Engineer's Signature and Seal

7. Agency Concurrence.

_____ Date: _____ *stamp*

Public Works, Deputy Director's Signature and Seal

County Govt Center, Room 206 | San Luis Obispo, CA 93408 | (P) 805-781-5252 | (F) 805-781-1229
pwd@co.slo.ca.us | slocounty.ca.gov

This form is subject to change. Please check the Department website to confirm you have the most current version.

F2: ADA Design Exception Request Application

COUNTY OF SAN LUIS OBISPO
Department of Public Works

PUBLIC IMPROVEMENT STANDARDS ADA DESIGN EXCEPTION REQUEST

Date: _____

Project Name: _____

Project APN: _____

Community: _____

Project Engineer: _____

Road Information: *(completed by Public Works)*

Road Name	Road No.

Design Engineer Required Submittal: *(completed by the Engineer of Work. Use as much space as necessary)*

1. Proposed Project and Existing Site Conditions.

2. Project Conditioned or Required Design Standards.

3. Proposed Alternative Design Standards.

4. Reasons for Requesting Design Exception.

5. Determination that the proposed alternative provides the same level of service, approximately the same estimated maintenance costs, and is not adverse to public health, safety and welfare.

6. For the reasoning and professional judgment indicated above, I recommend this design exception be approved by the Public Works Department.

_____ Date: _____

Project Engineer's Signature and Seal

stamp

7. Agency Concurrence.

_____ Date: _____

Public Works, Design Engineer's Signature and Seal

stamp

County Govt Center, Room 206 | San Luis Obispo, CA 93408 | (P) 805-781-5252 | (F) 805-781-1229
pwd@co.slo.ca.us | slocounty.ca.gov

These forms are subject to change. Please check the Department website to confirm you have the most current version.

F3: Other Forms

Web	Category	File Name	Description
Yes	Agreement	Monumentation-Agreement.docx	Monumentation Agreement
Yes	Agreement	Subdivision-Improvement-Agreement.docx	Subdivision Agreement - Only required if improvements not completed and applicant wants to record final map
Yes	Agreement	Checking-Inspection-Agreement_Subdivision-Application.docx	Checking & Inspection Agreement for Tentative Tract Applications
Yes	Agreement	Checking-Inspection-Agreement_Encroachment-Permit.docx	Checking & Inspection Agreement for encroachment permits (includes Curb, Gutter, and Sidewalk
Yes	Agreement	Checking-Inspection-Agreement_Subdivision.docx	Checking & Inspection Agreement for Subdivisions
Yes	Agreement	Curb-Gutter-Sidewalk-Road-Improvement-Agreement.docx	Curb, Gutter, and Sidewalk Agreement
Yes	Agreement	Engineer-of-Work-Agreement.docx	Standard Engineer of Work Agreement
Yes	Agreement	Engineer-of-Work-Certifcation.docx	Standard Engineer of Work certification form
Yes	Agreement	PIP-Phased-Building-Permit-Agreement.docx	Agreement to allow occupancy prior to completion of all public improvements. Must be signed by owner, PW and P&B
Yes	Bond	Subdivision-Improvement-Bond_CD-Agreement.docx	Subdivision Bond-Certificate of Deposit option
Yes	Bond	Subdivision-Improvement-Bond_Letter-of-Credit_Guarantee.docx	Subdivision Bond-2/2 Guarantee Letter of Credit option
Yes	Bond	Subdivision-Improvement-Bond_Letter-of-Credit_Performance.docx	Subdivision Bond-1/2 Performance Letter of Credit
Yes	Bond	Subdivision-Improvement-Bond_Surety_Performance.docx	Subdivision Bond- Surety option
Yes	Bond	Monumentation-Bond_Surety.docx	Monumentation Bond-Surety option
Yes	Bond	Curb-Gutter-Sidewalk-Road-Improvement-Bond_CD-Agreement.docx	Curb, Gutter, and Sidewalk Bond-Certificate of Deposit option

Web	Category	File Name	Description
Yes	Bond	Curb-Gutter-Sidewalk-Road-Improvement-Bond_Letter-of-Credit.docx	Curb, Gutter, and Sidewalk Bond-Letter of Credit option
Yes	Bond	Curb-Gutter-Sidewalk-Road-Improvement-Bond_Surety.docx	Curb, Gutter, and Sidewalk Bond-Surety option
Yes	Bond	Handout-Bond-Info.docx	Provides requirements for Subdivision and for Curb, Gutter, and Sidewalk bonds
Yes	Bond	Subdivision-Improvement-Bond_Signature-Requirements.docx	Provides requirements for signatures on bonds, agreements, offers of dedication, etc.
Yes	Bond	Handout-irsW9.pdf	Must be completed for all cash and letter of credit bonds accepted by the County
Yes	Construction Plans	PIP-Intake-Checklist.docx	Staff improvement plan intake checklist
No	Construction Plans	PIP ChkList PlanChk.docx	Staff improvement plan review checklist
Yes	Easement	Offer-of-Dedication_Drainage-Easement.docx	Offer of Dedication for public drainage easements
Yes	Easement	Offer-of-Dedication_Pedestrian-Access-Easement.docx	Offer of Dedication for public pedestrian easements
Yes	Easement	Offer-of-Dedication_Road-Easement.docx	Offer of Dedication for public road easements
Yes	Easement	Offer-of-Dedication_Slope-Easement.docx	Offer of Dedication for public slope easements
Yes	Easement	Right-Of-Entry_Construction-Easement.docx	Construction right-of-entry example
Yes	Encroachment Permit	ENC-Encroachment-Permit-Application.docx	Encroachment permit application
Yes	Encroachment Permit	ENC-Road-Restriction-List.docx	List of County roads with restricted hours of work (lane and road closures, shoulder closures okay)
Yes	Encroachment Permit	ENC-Transportation-Permit-Application-Annual.docx	Transportation Permit application for annual permits. Single vehicle, multi-trip
Yes	Encroachment Permit	ENC-Transportation-Permit-Application-Single.docx	Transportation Permit application for single trip permit
Yes	Improvement Plans	PIP Final ChkList.docx	Improvement plan project closure checklist
No	Mapping	PIP ChkLst Final.docx	Staff checklist for final map review
Yes	Mapping	Preliminary-Lot-Line-Adjustment-Map-Checklist.docx	Staff checklist for lot line adjustment review
Yes	Mapping	Map-Statements-Certificates.docx	Standard map title sheet statements

Web	Category	File Name	Description
Yes	Mapping	Tentative-Map-Checklist.docx	Tentative map checklist for subdivision applications
No	Procedure	ENC Trans Proced.docx	Procedure for processing Transportation Permits
No	Procedure	Proc AD-37.pdf	For staff transmittal of documents to County Counsel
No	Procedure	Proc Bond Claim.docx	For placing a claim on a subdivision bond.
Yes	Procedure	Proc EPA SubSur StrmWtr Basins.docx	Reviewing subsurface drainage basins on building permits and public improvement plans
No	Transmittal	PIP BldgPmt.docx	"Salmon Sheet" Transmittal from public improvements plan checker to Building Permit plan checker
No	Transmittal	PIP Plan Aprvl Trnsmtl.docx	Staff routing of improvement plans to DS Manager for construction approval and reprographics
No	Transmittal	PIP Traffic TradeSht.docx	Request to Transportation Division for road information
No	Waiver	CGS Waiver Referral.docx	Curb, Gutter, and Sidewalk waiver referral response to Dept. of Planning and Building
Yes	Waiver	Fee-Waiver-Request.docx	Completed by applicant to request a waiver from Public Works fee schedule, all fees.
Yes	Waiver	PIP-Design-Exception-Request.docx	Improvement plan design exemption request
Yes	Waiver	PIP-Design-Exception-Request_ADA.docx	Improvement plan design exemption request, ADA only

These notes are subject to change. Please check the Department website to confirm you have the most current version.

W1: Waterline Disinfection Procedure

COUNTY OF SAN LUIS OBISPO
Department of Public Works
Wade Horton, *Director*

August 25, 2017

PROCEDURAL MEMORANDUM O-3 (Revised)

To: Division Heads
Utilities Personnel

From: Director of Public Works

Subject: Water Line Disinfection Procedures – New Mains, Repairs, Loss of Pressure

The purpose of this memorandum is to outline the minimum requirements to be followed by laboratory personnel, water operators, inspectors and contractors for the disinfection and testing of new, repaired or depressurized potable water mains, including fire hydrants. These procedures are based on the American Water Works Association (AWWA) Standards for Disinfecting Water Mains (C651). **Note: This memorandum should be included in contract specifications for all waterline projects.**

All new water mains or mains taken out of service for inspection, repair, or other activities that might lead to contamination of water, shall be disinfected before they are placed or returned to service. Additionally, steps shall be taken to prevent contaminated materials from entering the water main during storage, construction, or repair. These steps include but are not limited to:

1. Keeping pipe interiors, fittings, and valves clean and dry.
2. Rodent proofing openings.
3. Scheduling pipe, fitting, and valve delivery close to pipe laying to minimize the potential for contamination.
4. Stringing pipe to minimize foreign material from entering.
5. Ensuring joint work is completed before water accumulates in trenches.

Any activity that may disrupt or affect the overall water system in regard to: system pressure, water supplied to consumers, contamination of existing lines, or other major events must be cleared through the Public Works Utilities Division Manager, Water Systems Superintendent or Water Quality Lab Manager prior to commencing that activity.

NEW WATER MAIN
Prior to Disinfection of the Line

1. Isolate the main from the existing distribution system per the current Public Works Improvement Standard.
2. Inspect all materials to be used to ensure the integrity of the materials.
3. **Before** the main is chlorinated, it shall be filled to remove air pockets and flushed to remove particles that may have entered the main during construction. The flushing velocity in the main shall not be less than 3.0 feet/second.
4. The main should undergo all hydrostatic pressure testing prior to disinfection.

County of San Luis Obispo Department of Public Works
County Govt Center, Room 206 | San Luis Obispo, CA 93408 | (P) 805-781-5252 | (F) 805-781-1229
pwd@co.slo.ca.us | slocounty.ca.gov

BASIC DISINFECTION PROCEDURE

Continuous Feed Method – Preferred

Water supplied from a temporary backflow protected connection to the existing distribution system or other approved supply source shall flow at a constant metered rate into the newly installed water main. The point of entry shall not be more than 10 feet from the beginning of the new line.

1. Liquid chlorine conforming to ANSI/AWWA B301 standard or sodium hypochlorite or calcium hypochlorite solution conforming to ANSI/AWWA B300 standard shall be fed continuously at or before the entry point in an amount sufficient to produce not less than 25 mg/L of free chlorine residual (see Table 1) throughout the new main and its appurtenances. Chlorine application shall not cease until the entire main is filled with the chlorinated water. **Note that "Tablet/Granule" method of chlorination is not acceptable.**

Table 1 Chlorine solution required to produce **25 mg/L** concentration in **100 feet** of pipe

Pipe Diameter	10% available chlorine solution	
Inches	gallon	milliliters
4	0.016	60
6	0.037	140
8	0.065	250
10	0.10	390
12	0.14	560
16	0.26	990

2. Measure the chlorine residual at regular intervals to ensure the main is acceptably chlorinated throughout.
3. The chlorinated water shall be retained in the main for a minimum of 24 hours, during which time all valves and hydrants in the treated section shall be operated to ensure disinfection of the appurtenances.
4. At the end of the 24 hour period, the treated water in all portions of the main shall have a free chlorine residual of not less than 10 mg/L to ensure the line is adequately disinfected and there is not a large chlorine demand within the closed system. If the chlorine residual is acceptable, proceed to "Final Flushing" section.

Other Options

Slug Method – large mains (>2500 feet)

Water supplied from a temporary backflow protected connection to the existing distribution system or other approved supply source shall flow at a constant metered rate into the newly installed water main. The point of entry shall not be more than 10 feet from the beginning of the new line.

1. Liquid chlorine solution conforming to ANSI/AWWA B300 or B301 standards shall be fed continuously to produce a solid column, or slug, of water that can move through the main and expose all interior surfaces to a chlorine concentration of at least 100 mg/L for a minimum of 3 hours.

2. The free chlorine will be measured in the slug as it travels through the line. If at any time the chlorine concentration drops below 50 mg/L, the flow will be stopped and additional chlorine will be injected to increase the chlorine residual to not less than 100 mg/L.
3. Proceed to "Final Flushing" section.

Option for Connections equal to or less than one pipe length (≤ 20 feet)

The new pipe, fittings, and valve(s) may be spray-disinfected or swabbed with a 1 percent solution of chlorine just prior to installation provided the connection to the existing main is less than or equal to 18 feet. Proceed to "Final Flushing" section.

FINAL FLUSHING (Prior to Sample Collection)

1. **Clear the main of heavily chlorinated water.** In order to prevent damage to the pipe lining and/or to prevent corrosion damage to the pipe itself, the heavily chlorinated water shall be flushed from the main fittings, valves, and branches until chlorine measurements show that the concentration in the water leaving the main is not higher than that generally prevailing in the distribution system or acceptable for domestic use (typically 2 ppm).
2. **Disposal of heavily chlorinated water.** A neutralizing chemical shall be applied to the water to be disposed of to thoroughly neutralize the chlorine residual remaining in the water per AWWA C655 guidelines and AWWA Best Management Practices (BMP) Manual for Drinking Water System Releases. An effort should be made to provide a beneficial reuse of the water prior to discharge such as landscape irrigation, agricultural irrigation or to augment the existing water supply. If the water is to be transported via a water truck, the vehicle must be equipped with an air gap or backflow device to prevent contamination of the water system.
3. **Best Management Practices to prevent water or runoff from entering a surface water must be implemented. Please see attachment A.**

   If the system discharges to land and has the potential to enter a water of the United States via direct discharge or a storm drain, additional monitoring may be required to ensure compliance with Federal, State and local regulatory agencies provisions. Contact the County Water Quality Laboratory 781-5111 for more information.

SAMPLE COLLECTION

1. Initial arrangement for scheduling sampling of new/repaired mains shall be made with the Water Quality Lab Manager (WQM). The WQM will arrange sampling dates and time with the Water Systems "Operator-in-Charge" of the affected system. The Water System Worker shall notify the Public Works Inspector of the time and location that samples are to be taken. The Inspector shall ensure the Contractor in charge of the line has installed adequate sampling stations on the days samples are to be taken.
2. After final flushing and before the new water main is connected to the distribution system, the main must have two consecutive sets of acceptable bacteriological samples collected and analyzed.
3. Samples shall be collected from every 1,200 feet of the new water main, plus one set from the end of the line, and at least one set from each branch. All samples shall be tested for total coliform, standard plate count (HPC) and general physical analysis (odor, turbidity, color, pH) in accordance with Standard Methods for the Examination of Water and Wastewater.
4. Sample collection procedure at each location.

a. Option A: Collect bacteriological samples after final line flushing. Collect second set of samples a minimum of 16 hours later.
b. Option B: Allow the line to sit without use for 16 hours. Collect two sets of bacteriological samples 15 minutes apart while sample tap is running.
c. If, in the opinion of the County, excessive quantities of dirt, debris, or trench water has entered the pipeline during construction, the following additional sampling procedures may be implemented.
    i. Samples shall be taken of water that has stood in the new main for at least 16 hours after final flushing, and/or
    ii. Additional bacteriological samples may be requested at intervals of approximately 200 feet.

5. No hose or fire hydrant shall be used in the collection of samples. A combination blow-off and sampling tap for mains up to, and including, eight-inch diameter may be used (See Figure 1) or a corporation stop that is installed in the main with a copper tube gooseneck assembly. After samples have been collected, the gooseneck assembly may be removed and retained for future use. Each sample site must be positioned so that it may be flushed for several minutes (during sampling) without contamination of the hose bib, sample bottles, etc, when samples are being taken. Samples for bacteriological and physical analysis shall be collected by a Water Systems Worker or laboratory personnel as required by Standard Methods for the Examination of Water and Wastewater. Samples shall be refrigerated or packed in an ice chest for immediate delivery to the Public Works Lab.

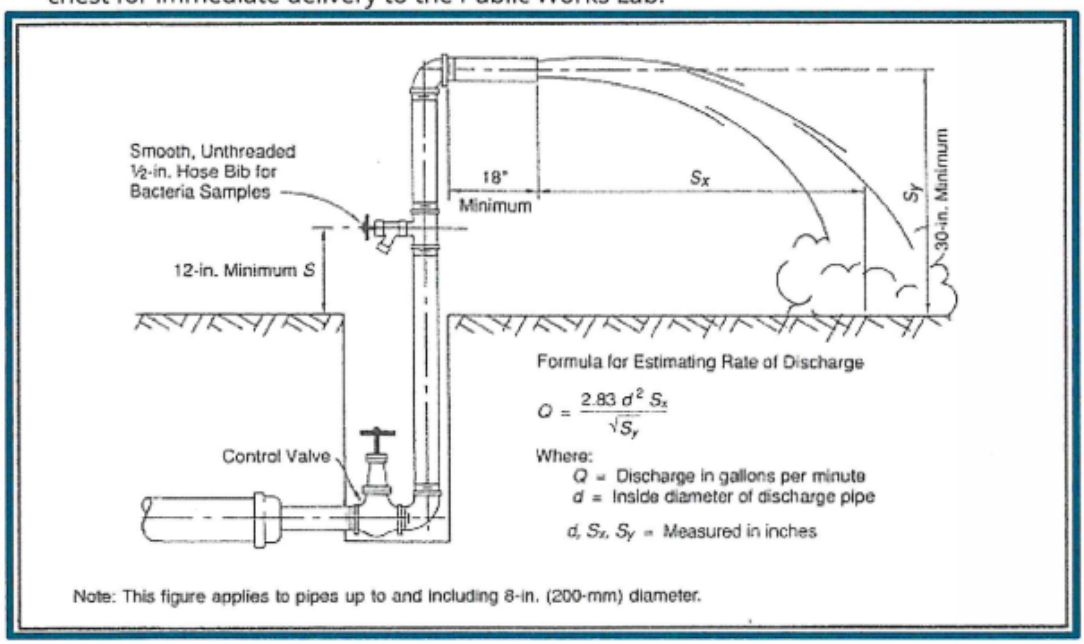

Figure 1: Typical Sample tap and blowoff – Drawing from AWWA Standard C651—14 "Disinfecting Water Mains"

NOTIFICATION PROCEDURE

1. Once it has been determined that all bacteriological (Total coliform negative and HPC <500 CFU/mL) and general physical analysis meet current requirements, the WQM shall notify the "Operator-in-Charge" who will notify the inspector in charge of the job. It shall be the Inspector's responsibility to notify the contractor/property owner of the test results.
2. If the test results do not meet current requirements, the notification procedure as outlined above shall be followed. Once the contractor/property owner has been notified, it shall be his/her responsibility to perform the following; flush the line; re-chlorinate the lines (for a period of 24 hours); flush to an acceptable chlorine residual level; and have the line re-sampled.

ANALYSIS CHARGES.

Unless other stated in the construction contract, the cost of the initial sampling and analysis shall be paid by the contractor/property owner. In the event that follow-up analyses are required due to failed tests, the contractor/property owner will be liable for all cost associated with the follow-up sampling and analyses.

REPAIR OF EXISTING MAINS

If a leak can be repaired in place with clamping devices and **remain pressurized**, there is minimal danger from contamination. Clean the exterior of the main before the clamping device is installed. Flush approximately three volumes of water from the pipe and make sure the water is visually clear and the chlorine residual is restored to distribution background levels. No bacteriological testing is necessary.

Partial or Full, Sustained Pressure Loss in System

Distribution system pressure loss may occur to due a water main break, power loss, equipment failure, etc. Pressure loss is defined as distribution system pressure of less than twenty (20) pounds per square inch (psi). A loss of pressure in the distribution system may cause backpressure, back siphonage, or a net movement of water from outside the pipe to the inside through cracks, breaks, or joints in the distribution system that are common in all water systems. Such a system failure carries with it a high potential that fecal contamination or other disease-causing organisms could enter the distribution system.

If an existing main is **wholly or partially depressurized**, it will be necessary to ensure no trench material has entered the pipeline.

1. Isolate the section of main or area by shutting off all service connections.
2. Swab all accessible interior of the pipe and fittings used to make the repair with a 1 percent hypochlorite solution.
3. Flush approximately three volumes of water from the pipe and make sure the water is visually clear and the chlorine residual is restored to distribution background levels.
4. Collect a bacteriological sample after repairs are complete and the line is brought into service to provide a record of effective disinfection.
5. If there is a positive bacteriological sample, daily sampling shall continue until two consecutive negative samples are recorded.

If there is an **uncontrolled pipeline failure and there is contamination of the pipeline**, it will be necessary to disinfect the line using the "Continuous Feed Method" for new mains as described above. In an emergency where the pipeline must be returned to service immediately, a higher chlorine dose with a shorter contact time may be used. This will be evaluated on a case-by-case basis. Always isolate the section of main by shutting of all service connections to prevent highly chlorinated water being delivered to customers.

NOTE: If there is a possibility of customers receiving a high level of chlorine because they can not be fully isolated from the system, a free chlorine residual of up to 4 mg/L can be maintained for at least 16 hours in conjunction with flushing, coliform sampling, and public education. All highly chlorinated water should be disposed of properly.

Collect a bacteriological sample after any repairs are complete and the line is brought into service to provide a record of effective disinfection. If there is a positive bacteriological sample, additional disinfection of the repaired line and daily sampling shall continue until two consecutive negative samples are recorded.

If deemed appropriate by the State Water Resources Control Board – Division of Drinking Water and the Department, the County will issue a Loss of Pressure Boil Water Advisory to the affected service area in accordance with the Public Notification

DOCUMENTATION

The Public Works Utilities Department realizes pipe repair projects can vary tremendously and disinfection procedures may need to be adjusted based on the sanitary conditions existing at the time of repair. Utilities staff will always use best construction and disinfection practices to ensure public health protection. A record of all water quality testing will be kept on file.

References: ANSI/AWWA Standard C651-14
NPDES Permit WQ 2014-0194-DWQ Statewide Permit for Drinking Water System Discharges to Waters of the United States

File: Procedural Manual (G:\Policies & Procedures\Utilities)

Attachment 1:

BEST MANAGEMENT PRACTICES (BMPs) for Water System Discharges

Excerpt from NPDES Order WQ 2014-0194-DWQ, General Order No. CAG140001 Statewide NPDES Permit for Drinking Water System Discharges to Waters of the United States

BMPs will be implemented to minimize impacts to possible receiving waters and to prevent erosion or hydromodification caused by drinking water system discharges. Please Note: Per the NPDES order for Drinking Water System Discharges to Waters of the United States, this applies to raw water transmission lines as well.

BMP Procedures

A. Chlorinated Water Discharges

All chlorinated water shall be dechlorinated chemically or naturally. Filter bags, filter rolls and fabric filters, shall be used to remove any sand, silt or debris from entering the surface water or storm drain system.

B. Superchlorinated Water Discharges

All superchlorinated water shall be dechlorinated at the point of discharge directly. Filter bags or rolls, or equivalent, shall be used to remove any sand, silt or debris from entering the surface water or storm drain system.

C. Facility Drainage Discharges

All discharges containing a chlorine residual from transmission, treatment, storage and distribution facility draining for cleaning and maintenance shall be dechlorinated. All water discharges from drinking water systems (raw or treated) shall use filter bags, filter rolls and fabric filters to remove sediment prior to discharging to surface waters or storm drains.

D. Groundwater Supply Well Discharges

During flushing, rehabilitation, or development of water supply wells, multi-baffled settling tanks, or equivalent, shall be used if necessary to remove large particles and to reduce turbidity. If further management is needed to reduce solids after settling, the Discharger shall filter the water implementing a filter-bag filtration system, or equivalent practice, before discharging to achieve a turbidity threshold that is <100 NTU.

BMP Measures

A. Sediment and Erosion Control

Sediment and erosion control BMPs that assess and prevent potential impacts to receiving waters, at discharge points and downstream reaches.

1. **Receiving Waters.** The Discharger shall identify methods for locating discharge points and receiving waters to determine appropriate sediment and erosion control measures.

2. **Sediment Control.** Sediment control practices shall be used to filter and trap sediment particles, and prevent them from reaching storm drains or receiving waters. Sediment control practices to control sedimentation discharge and buildup in receiving waters include:

a. Straw wattles and gravel bags may be placed in a flow pathway and around storm drain inlets;
b. Plastic sheets may be used to line a trench and flow pathway to prevent water contact with soil;
c. Check dams may be constructed to dissipate flow energy and minimize the potential for discharges to dislodge soil; and
d. A storm water swale, if available nearby to the point of discharge that has sufficient capacity for the discharge.
e. Discharge to an open field or turf to remove sand and/or silt or larger particles prior to surface water discharge.

3. **Erosion Controls**

Erosion control practices shall be used to protect soil surfaces at discharge points and receiving waters. Erosion control practices shall be used to prevent re-suspension of ambient sediment within a receiving water, and shoreline erosion and streambed scour. Such controls shall minimize the energy of discharges by managing flow velocities and volumes, and shall be appropriately designed so that the discharge does not exceed the hydraulic capacity of the receiving water at the point of discharge and areas downstream of the discharge point. The following measures may be used to control erosion in receiving waters:

a. Construct check dams to slow down the flow;
b. Install flow diffusers at discharge point;
c. Fashion discharge flow path with as little slope as possible; and
d. Decrease discharge flow rates and duration.

B. Dechlorination

The following types of dechlorination methods, or equivalent, to remove chlorine:

1. Dechlorinating Diffuser – The dechlorinating diffuser connects directly to a discharge nozzle (e.g., to a fire hydrant or fire hose) and contains a chamber that houses dechlorination agent. Some diffusers feature a siphon for dechlorinating agent tablets or a solution to dechlorinate the water.
2. Dechlorination Mats – These mats are used to facilitate effective contact between the flow and dechlorinating agent during dechlorination. For dechlorination of discharges from trenches during main breaks, the tablets are placed inside synthetic mesh fabric pockets sewn together in a grid or line. The dechlorinating mats are laid across the flow path or over the storm water conveyance system. As the discharged water contacts the tablets, dechlorinating agent is released and chlorine is inactivated.
3. Broadcast Dechlorination – Dechlorination granules are spread over an area, such as pavement, where chlorinated water is flowing toward a storm water conveyance system inlet. As the discharged water contacts the tablets, dechlorinating agent is released and chlorine is inactivated.
4. Chemical Injection Metering Pump – Occasionally, a dechlorination agent is injected into a discharge pipe, such as a tank drain, to dechlorinate the water before entering the storm water system.
5. Addition of dechlorination chemicals shall be managed to ensure the dechlorination agent does not adversely affect or impact beneficial uses of the receiving waters.

All personnel using, operating and maintaining all facilities and equipment shall be properly trained to implement BMPs to discharges when conducting mandated operational and maintenance activities. The Discharger's staff and/or contractors shall be properly trained to understand permit compliance needs and perform the required monitoring, notification and reporting.

C. Equipment and Supplies

Equipment and sampling meters shall be inspected, maintained and calibrated per manufacturer instructions and specifications.

For additional information, please see AWWA's "Best Management Practices (BMP) Manual for Drinking Water System Releases"

G:\Policies & Procedures\Utilities\Working Files & Superseded Versions\O-03\O-3 Final FMZ 20170818.docx

These notes are subject to change. Please check the Department website to confirm you have the most current version.

W2: Approved Materials for County Water Systems

Assembly	Approved Materials
Service Saddle for C900 PVC Pipe	FORD 202BS, DOUBLE BAND BRASS SADDLE WITH STAINLESS STEEL BAND; or MUELLER BR2S, Bronze service saddles – double strap
Service Saddle for steel or asbestos cement pipe	BRONZE SERVICE SADDLE, DOUBLE STRAP, shall be: MUELLER BR 2B 0899 IP, 075 or 100; or FORD 202B.
Corporation stop with IP threads	MUELLER H-10012N; JAMES JONES E-41; or FORD BALLCORP COPRPORATION STOPS, F500MNL;
INSTA TITE Connection	MUELLER H-15426 (male), H-15456 (female); or FORD ULTRA-TITE COUPLING (C86-xx-U-NL or C16-xx-U-NL style)
Curb stop ball valve	JAMES JONES J-182 WITH LOCKWING; or MUELLER 300 BALL STRAIGHT METER VALVE FORD B11-xxx-NL style;
Angle meter stop	FIP Inlet x Meter Swivel Nut Outlet, with locking wing, shall be: JONES J-1966W; or MUELLER B-24265N, 300 Ball Angle Meter Valve; or FORD ANGLE KEY METER VALVES, BA13-xxxW-NL (or BAF13) style
Meter box	CHRISTY B12 UTILITY BOX
Meter box lid	CHRISTY B12S, Reinforced concrete with 5 1/2”x 9 1/8” concrete reading lid; or CHRISTY B12-61D, Steel Checker Plate Cover
Gate valve	Valves shall open to the left, have non-rising stem with o-ring seals, resilient wedge, resilient seat with fully encapsulated gate, epoxy coated inside and outside, full-size waterway, 200 psi working pressure, and meet AWWA C-509; Valves shall have Type 316 stainless steel bolts and nuts for the stuffing box and bonnet; and shall be: CLOW MODEL 2639 / 2640; MUELLER A-2361 RESILIENT WEDGE GATE VALVES THIN WALL
Traffic Valve Box	Traffic box shall be H/20 rated with extensions to valve: BROOKS No. 3RT; or CHRISTY No. G05T;
Traffic Valve Box Lid	Valve Box Lid Marked “Water” CAST IRON LID, CHRISTY No. G05CT;
Fire Hydrant	Each hydrant shall have two 2-1/2” outlets and one 4” outlet with external NSF thread; shall be: CLOW F960;
Air Release Valve	Air and vacuum relief valve with stainless steel trim, meets AWWA C-512, compound lever system, and NPT screwed or ANSI Class Flanges, shall be: CRISPIN UL Series, or approved equal

STANDARD DRAWINGS

CRITERIA	ADT <400	ADT 401-1000	ADT 1001-6000	ADT >6000
DESIGN SPEED, MILES PER HOUR, (MINIMUM)				
FLAT	40	50	55	55
ROLLING	30	40	40	45
MOUNTAINOUS	20	30	30	35
CURVE RADIUS, FEET (MINIMUM)				
FLAT	510	830	1050	1050
ROLLING	275	510	510	670
MOUNTAINOUS	110	250	275	350
GRADE, PERCENT (MAXIMUM)				
FLAT	7	6	6	6
ROLLING	9	8	8	8
MOUNTAINOUS	12	10	10	10

NOTES:

1. AVERAGE DAILY TRIPS (ADT) IS BASED UPON A 20-YEAR PROJECTION.
2. ADT IN EXCESS OF 6,000 WILL REQUIRE SPECIAL DESIGN REQUIREMENTS BY THE DEPARTMENT.
3. SUPERELEVATION MAY BE REQUIRED, SEE STANDARD DRAWING A-4b.
4. THE STRUCTURAL SECTION SHALL BE BASED ON THE TRAFFIC INDEX AS PROVIDED BY THE DEPARTMENT.
5. RIGHT-OF-WAY SHALL BE THE MINIMUM REQUIRED BY THE DESIGN STANDARDS.
6. FOR ADT <250 GRADES MAY BE INCREASED BY 150% FOR RELATIVELY SHORT LENGTHS.

FLAT ROADWAYS ARE THOSE SECTIONS OF ROADWAY IN WHICH THERE ARE LITTLE OR NO TOPOGRAPHIC RESTRAINTS ON VERTICAL AND HORIZONTAL SIGHT DISTANCE AND WHICH COULD BE CONSTRUCTED WITH MINOR CUTS AND FILLS.

ROLLING ROADWAYS ARE THOSE SECTIONS OF ROADWAY IN WHICH THERE ARE TOPOGRAPHIC RESTRAINTS ON VERTICAL AND HORIZONTAL SIGHT DISTANCE WHICH REQUIRE SOME MODERATE CUTS AND FILLS.

MOUNTAINOUS ROADWAYS ARE THOSE SECTIONS OF ROADWAY WHICH REQUIRE MAXIMUM OR NEAR MAXIMUM GRADES AND MINIMUM CURVE RADII IN ORDER TO REDUCE THE CUTS AND FILLS TO PRACTICAL AND VISUALLY ACCEPTABLE HEIGHTS.

THE DETERMINATION OF FLAT, ROLLING, OR MOUNTAINOUS ROADWAYS SHALL BE UNIFORM OVER THE FULL LENGTH OF A ROADWAY EXCEPT WHERE THE DEPARTMENT DETERMINES THAT A SAFE TRANSITION MAY BE MADE.

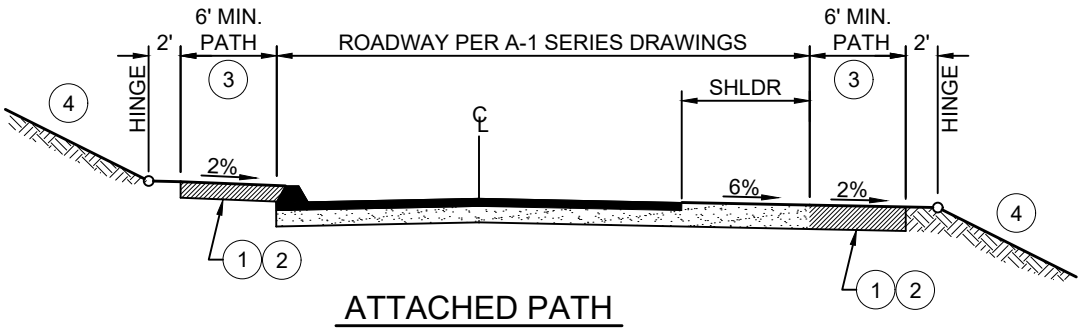

ATTACHED PATH

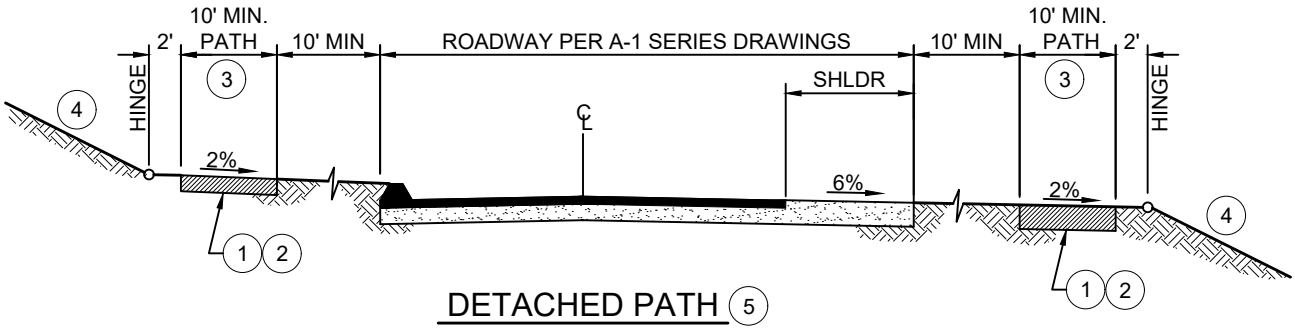

DETACHED PATH (5)

NOTES:

1. THE LONGITUDINAL GRADE ON THE DETACHED PATH SHALL MATCH THE ADJACENT ROADWAY GRADE.
2. PATH MATERIAL SHALL BE: 6-INCHES MINIMUM DEPTH ANGULAR DECOMPOSED GRANITE WITH A MAXIMUM AGGREGATE SIZE OF 3/8-INCH OR LESS AND COMPACTED TO A MINIMUM OF 90%. NATIVE SANDY MATERIAL MAY BE USED IF IT IS CONFINED EITHER BY THE ROADWAY OR BY AN APPROVED ROOT BARRIER INSTALLED ON BOTH SIDES OF PATH, CONSTRUCTED TO A MINIMUM DEPTH OF 24-INCHES, AND COMPACTED TO 90%. THE PATH SHALL BE TOLERANT TO NORMAL USE AND RESISTANT TO EROSION.
3. NO OBSTACLES OR AT-GRADE VAULTS SHALL BE LOCATED WITHIN THE LIMITS OF THE PATH. ADJACENT TO THE PATH, THE FOLLOWING MINIMUM CLEARANCES TO OBSTACLES SHALL BE MAINTAINED:
   - MINIMUM OF 2' CLEARANCE ON EACH SIDE OF PATH.
   - MINIMUM OF 5' CLEARANCE FROM NEW TREES, SHRUBS AND OTHER OBSTRUCTIONS.
   - MINIMUM OF 10' CLEARANCE FROM UNFENCED DRAINAGE BASINS.
   - MINIMUM OF 12' CLEARANCE TO OVERHEAD BRANCHES, SIGNS, AND OTHER ABOVE GRADE OBSTACLES.
4. CUT AND FILL SLOPES BEYOND HINGE POINTS SHALL NOT EXCEED 2 HORIZONTAL:1 VERTICAL (OR 3h:1v IN NATIVE SAND) AND SHALL BE STABILIZED WITH APPROPRIATE EROSION CONTROL.
5. ALL RURAL ROADS WITH PREVAILING SPEEDS OF 40 MPH OR GREATER AND AN ADT OF 3,000 OR GREATER SHALL REQUIRE A DETACHED PATH.
6. NO PORTION OF THE PATH SHALL BE USED AS PART OF A SURFACE DRAINAGE CONVEYANCE SYSTEM.
7. IF DRAINAGE FACILITIES ARE REQUIRED THEY SHALL BE EITHER STORM DRAIN PIPES OR A CONCRETE DRY CROSSING (DESIGN TO BE APPROVED BY THE DEPARTMENT).
8. PATH SIGNAGE MAY BE REQUIRED AND MUST HAVE PRIOR APPROVAL FROM THE COUNTY PARKS & RECREATION.

DEPARTMENT OF PUBLIC WORKS - STANDARD DRAWINGS

RURAL ROAD SECTION

MULTIUSE PATH

Issued: August 2022	Scale: NTS
Revised:	Revision No:
Drawing No: A-1a	

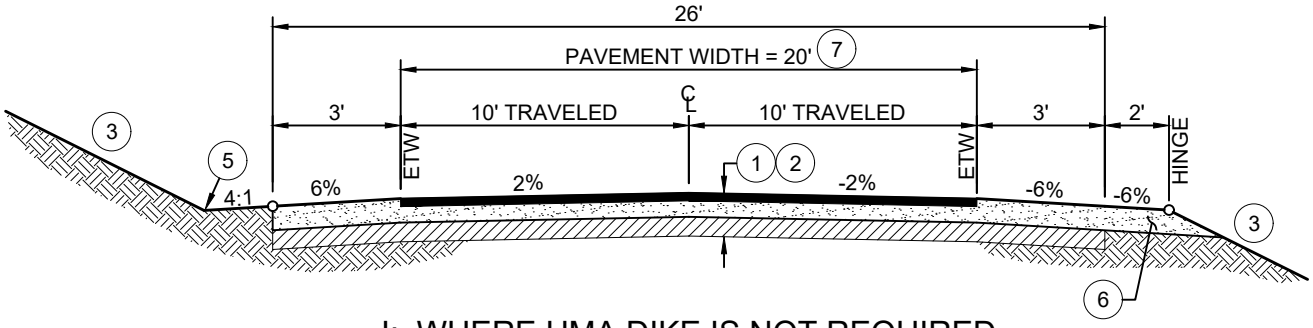

I: WHERE HMA DIKE IS NOT REQUIRED

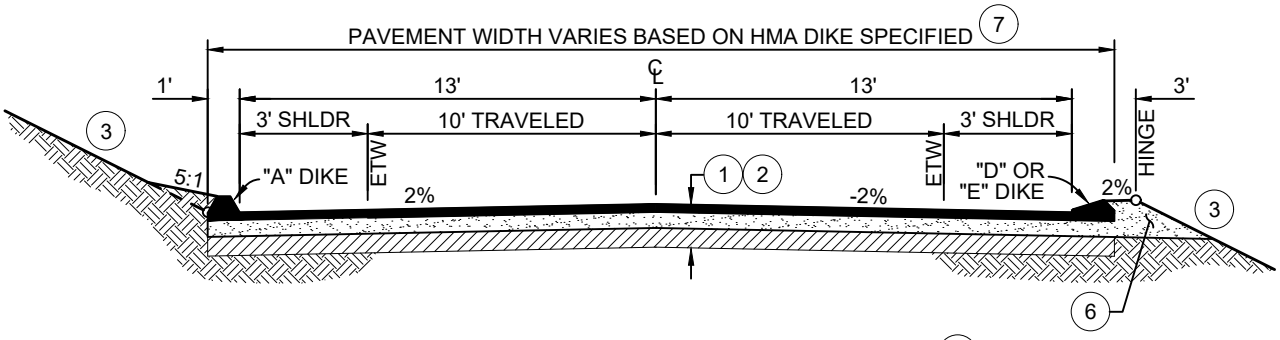

II: WHERE HMA DIKE IS REQUIRED (4)

NOTES:

1. THE STRUCTURAL ROAD SECTION SHALL BE DETERMINED AT THE TIME OF CONSTRUCTION BASED ON THE SUBGRADE R-VALUE AND THE TRAFFIC INDEX (TI) AS PROVIDED BY THE DEPARTMENT, AND IN NO CASE SHALL THE ZONE OF COMPACTION BE LESS THAN 2.5-FEET IN THICKNESS. THE ROAD SECTION SHALL BE APPROVED BY THE DEPARTMENT PRIOR TO CONSTRUCTION.
2. TYPICAL SECTION SHALL BE:
   - HOT MIX ASPHALT (HMA) PER THE DESIGN STANDARDS TO 95% RELATIVE COMPACTION, OVER
   - CLASS II AGGREGATE BASE TO 95% RELATIVE COMPACTION, OVER
   - 12" MINIMUM SUBGRADE TO 95% RELATIVE COMPACTION
3. CUT AND FILL SLOPES SHALL NOT EXCEED 2 HORIZONTAL:1 VERTICAL (OR 3h:1v IN NATIVE SAND) WITHOUT PRIOR APPROVAL BY THE DEPARTMENT.
4. HMA DIKE REQUIREMENTS PER C-6.
5. THE PROJECT ENGINEER SHALL ACCOMMODATE FOR ROADSIDE DRAINAGE SUCH THAT IT DOES NOT ERODE THE AGGREGATE SHOULDER. THE SIDE SLOPE OF ANY DRAINAGE SWALE DIRECTLY ADJACENT TO THE EDGE OF ROADWAY SHALL NOT EXCEED 4h:1v. DESIGN AND CONSTRUCTION SHALL BE TO THE SATISFACTION OF THE DEPARTMENT.
6. THE AGGREGATE BASE MATERIAL SHALL EXTEND TO THE EDGE OF THE FILL SLOPE (CHOKER) TO ALLOW FOR STRUCTURAL ROAD SECTION DRAINAGE.
7. **ADDITIONAL WIDTH SHALL BE PROVIDED WHERE TURN AND/OR BICYCLE LANES ARE REQUIRED BY THE DESIGN STANDARDS.**
8. A STRIPING AND SIGNAGE PLAN SHALL BE REQUIRED BY THE DEPARTMENT WHEN BIKE LANES, NO PARKING ZONES, SIGNAGE, AND PAVEMENT MARKINGS ARE A REQUIRED COMPONENT OF THE IMPROVEMENTS.

DEPARTMENT OF PUBLIC WORKS - STANDARD DRAWINGS

RURAL ROAD SECTION

<400 FUTURE ADT

Issued:	Scale:
August 2022	NTS
Revised:	Revision No:
Drawing No:	A-1b

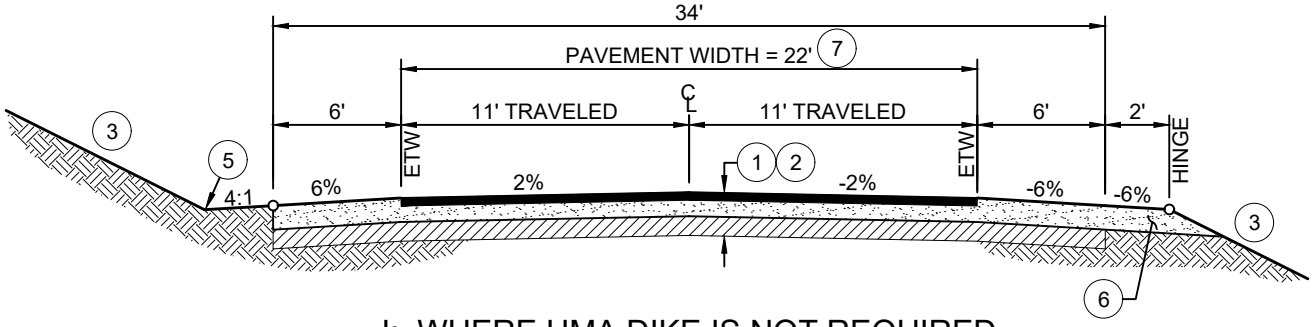

I: WHERE HMA DIKE IS NOT REQUIRED

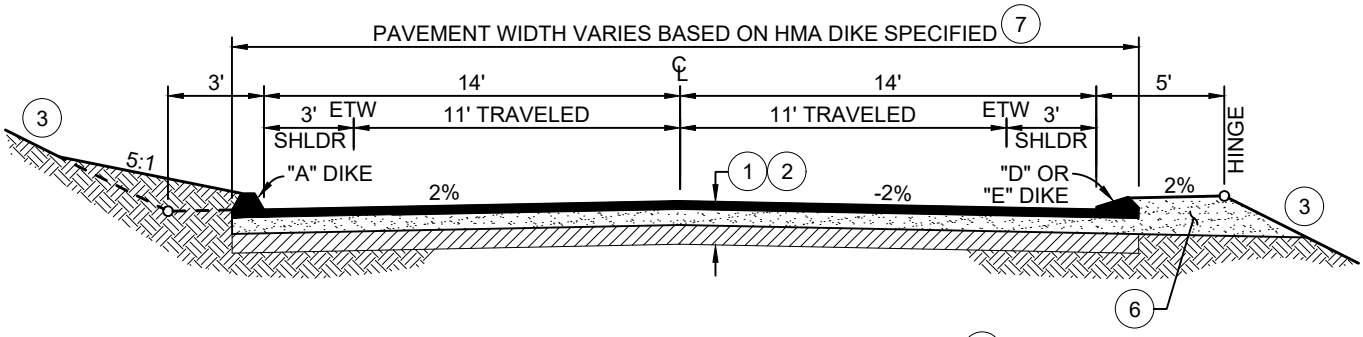

II: WHERE HMA DIKE IS REQUIRED 4

NOTES:

1. THE STRUCTURAL ROAD SECTION SHALL BE DETERMINED AT THE TIME OF CONSTRUCTION BASED ON THE SUBGRADE R-VALUE AND THE TRAFFIC INDEX (TI) AS PROVIDED BY THE DEPARTMENT, AND IN NO CASE SHALL THE ZONE OF COMPACTION BE LESS THAN 2.5-FEET IN THICKNESS. THE ROAD SECTION SHALL BE APPROVED BY THE DEPARTMENT PRIOR TO CONSTRUCTION.
2. TYPICAL SECTION SHALL BE:
   - HOT MIX ASPHALT (HMA) PER THE DESIGN STANDARDS TO 95% RELATIVE COMPACTION, OVER
   - CLASS II AGGREGATE BASE TO 95% RELATIVE COMPACTION, OVER
   - 12" MINIMUM SUBGRADE TO 95% RELATIVE COMPACTION
3. CUT AND FILL SLOPES SHALL NOT EXCEED 2 HORIZONTAL:1 VERTICAL (OR 3h:1v IN NATIVE SAND) WITHOUT PRIOR APPROVAL BY THE DEPARTMENT.
4. HMA DIKE REQUIREMENTS PER C-6.
5. THE PROJECT ENGINEER SHALL ACCOMMODATE FOR ROADSIDE DRAINAGE SUCH THAT IT DOES NOT ERODE THE AGGREGATE SHOULDER. THE SIDE SLOPE OF ANY DRAINAGE SWALE DIRECTLY ADJACENT TO THE EDGE OF ROADWAY SHALL NOT EXCEED 4h:1v. DESIGN AND CONSTRUCTION SHALL BE TO THE SATISFACTION OF THE DEPARTMENT.
6. THE AGGREGATE BASE MATERIAL SHALL EXTEND TO THE EDGE OF THE FILL SLOPE (CHOKER) TO ALLOW FOR STRUCTURAL ROAD SECTION DRAINAGE.
7. **ADDITIONAL WIDTH SHALL BE PROVIDED WHERE TURN AND/OR BICYCLE LANES ARE REQUIRED BY THE DESIGN STANDARDS.**
8. A STRIPING AND SIGNAGE PLAN SHALL BE REQUIRED BY THE DEPARTMENT WHEN BIKE LANES, NO PARKING ZONES, SIGNAGE, AND PAVEMENT MARKINGS ARE A REQUIRED COMPONENT OF THE IMPROVEMENTS.

DEPARTMENT OF PUBLIC WORKS - STANDARD DRAWINGS

RURAL ROAD SECTION

400 to 1,000 FUTURE ADT

Issued:	Scale:
August 2022	NTS
Revised:	Revision No:
Drawing No:	A-1c

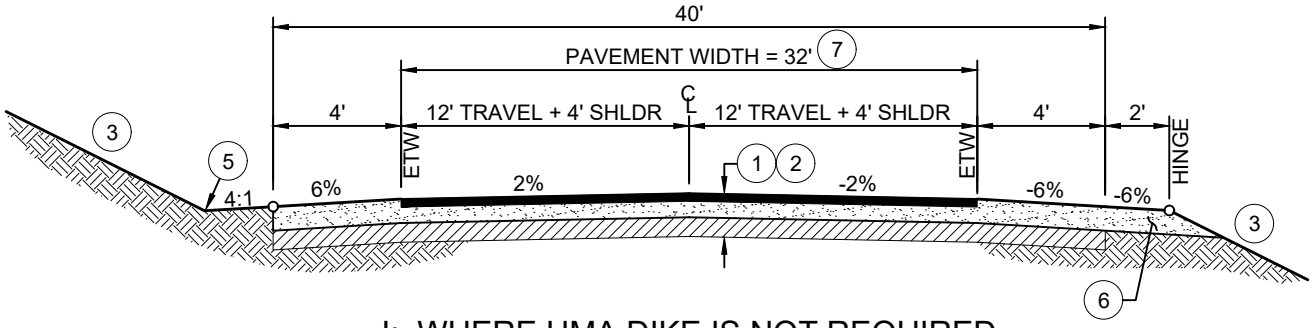

I: WHERE HMA DIKE IS NOT REQUIRED

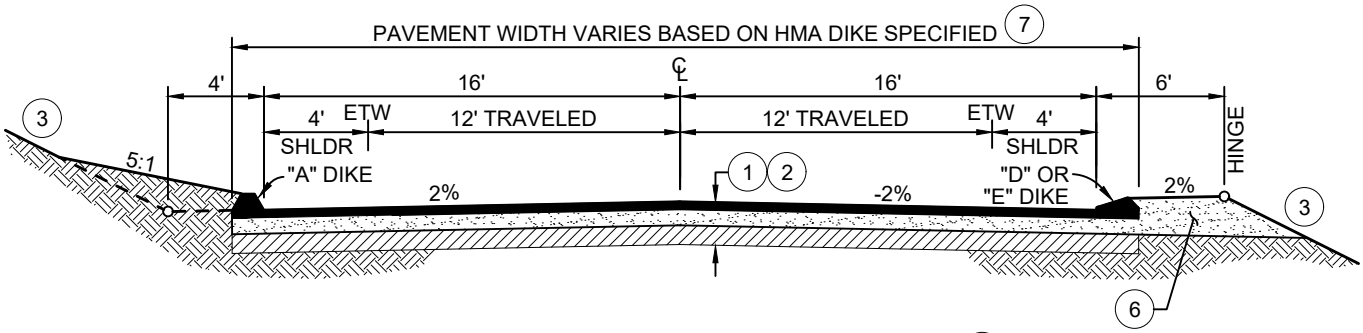

II: WHERE HMA DIKE IS REQUIRED 4

NOTES:

1. THE STRUCTURAL ROAD SECTION SHALL BE DETERMINED AT THE TIME OF CONSTRUCTION BASED ON THE SUBGRADE R-VALUE AND THE TRAFFIC INDEX (TI) AS PROVIDED BY THE DEPARTMENT, AND IN NO CASE SHALL THE ZONE OF COMPACTION BE LESS THAN 2.5-FEET IN THICKNESS. THE ROAD SECTION SHALL BE APPROVED BY THE DEPARTMENT PRIOR TO CONSTRUCTION.
2. TYPICAL SECTION SHALL BE:
   - HOT MIX ASPHALT (HMA) PER THE DESIGN STANDARDS TO 95% RELATIVE COMPACTION, OVER
   - CLASS II AGGREGATE BASE TO 95% RELATIVE COMPACTION, OVER
   - 12" MINIMUM SUBGRADE TO 95% RELATIVE COMPACTION
3. CUT AND FILL SLOPES SHALL NOT EXCEED 2 HORIZONTAL:1 VERTICAL (OR 3h:1v IN NATIVE SAND) WITHOUT PRIOR APPROVAL BY THE DEPARTMENT.
4. HMA DIKE REQUIREMENTS PER C-6.
5. THE PROJECT ENGINEER SHALL ACCOMMODATE FOR ROADSIDE DRAINAGE SUCH THAT IT DOES NOT ERODE THE AGGREGATE SHOULDER. THE SIDE SLOPE OF ANY DRAINAGE SWALE DIRECTLY ADJACENT TO THE EDGE OF ROADWAY SHALL NOT EXCEED 4h:1v. DESIGN AND CONSTRUCTION SHALL BE TO THE SATISFACTION OF THE DEPARTMENT.
6. THE AGGREGATE BASE MATERIAL SHALL EXTEND TO THE EDGE OF THE FILL SLOPE (CHOKER) TO ALLOW FOR STRUCTURAL ROAD SECTION DRAINAGE.
7. **ADDITIONAL WIDTH SHALL BE PROVIDED WHERE TURN AND/OR BICYCLE LANES ARE REQUIRED BY THE DESIGN STANDARDS.**
8. A STRIPING AND SIGNAGE PLAN SHALL BE REQUIRED BY THE DEPARTMENT WHEN BIKE LANES, NO PARKING ZONES, SIGNAGE, AND PAVEMENT MARKINGS ARE A REQUIRED COMPONENT OF THE IMPROVEMENTS.

DEPARTMENT OF PUBLIC WORKS - STANDARD DRAWINGS

RURAL ROAD SECTION

>1,000 to 6,000 FUTURE ADT

Issued:	Scale:
August 2022	NTS
Revised:	Revision No:
Drawing No:	A-1d

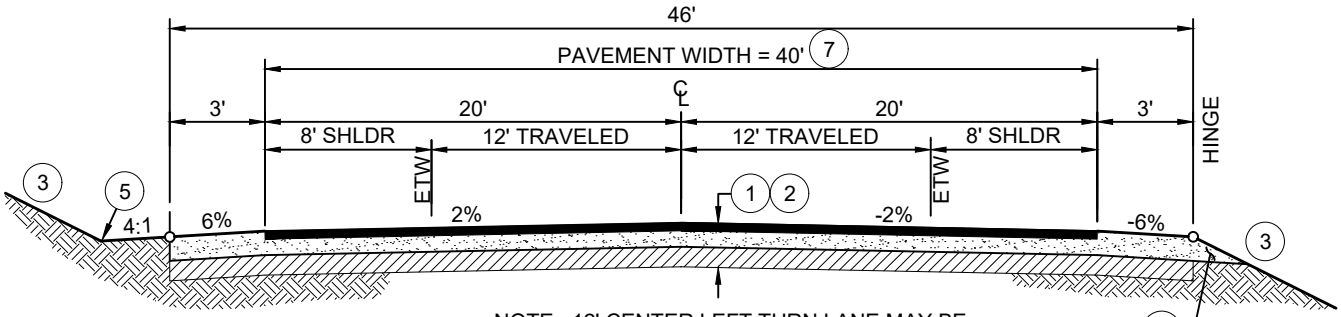

NOTE: 12' CENTER LEFT TURN LANE MAY BE REQUIRED AT ALL INTERSECTIONS AND DRIVEWAYS

I: WHERE HMA DIKE IS NOT REQUIRED

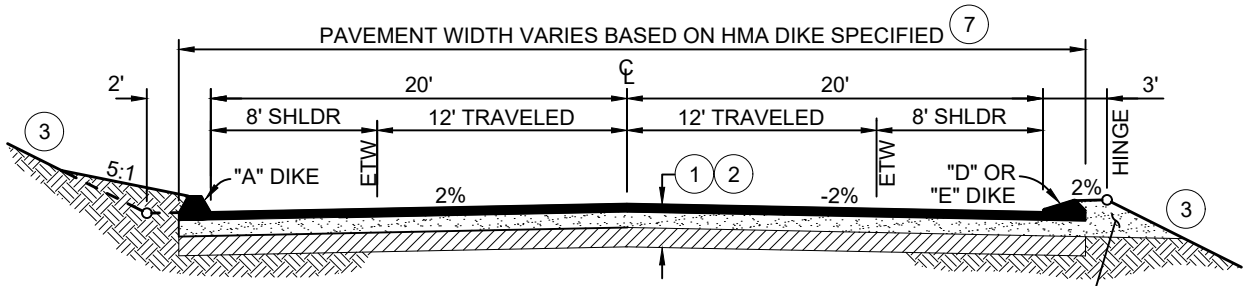

NOTE: 12' CENTER LEFT TURN LANE MAY BE REQUIRED AT ALL INTERSECTIONS AND DRIVEWAYS

II: WHERE HMA DIKE IS REQUIRED 4

NOTES:

1. THE STRUCTURAL ROAD SECTION SHALL BE DETERMINED AT THE TIME OF CONSTRUCTION BASED ON THE SUBGRADE R-VALUE AND THE TRAFFIC INDEX (TI) AS PROVIDED BY THE DEPARTMENT, AND IN NO CASE SHALL THE ZONE OF COMPACTION BE LESS THAN 2.5-FEET IN THICKNESS. THE ROAD SECTION SHALL BE APPROVED BY THE DEPARTMENT PRIOR TO CONSTRUCTION.
2. TYPICAL SECTION SHALL BE:
   - HOT MIX ASPHALT (HMA) PER THE DESIGN STANDARDS TO 95% RELATIVE COMPACTION, OVER
   - CLASS II AGGREGATE BASE TO 95% RELATIVE COMPACTION, OVER
   - 12" MINIMUM SUBGRADE TO 95% RELATIVE COMPACTION
3. CUT AND FILL SLOPES SHALL NOT EXCEED 2 HORIZONTAL:1 VERTICAL (OR 3h:1v IN NATIVE SAND) WITHOUT PRIOR APPROVAL BY THE DEPARTMENT.
4. HMA DIKE REQUIREMENTS PER C-6.
5. THE PROJECT ENGINEER SHALL ACCOMMODATE FOR ROADSIDE DRAINAGE SUCH THAT IT DOES NOT ERODE THE AGGREGATE SHOULDER. THE SIDE SLOPE OF ANY DRAINAGE SWALE DIRECTLY ADJACENT TO THE EDGE OF ROADWAY SHALL NOT EXCEED 4h:1v. DESIGN AND CONSTRUCTION SHALL BE TO THE SATISFACTION OF THE DEPARTMENT.
6. THE AGGREGATE BASE MATERIAL SHALL EXTEND TO THE EDGE OF THE FILL SLOPE (CHOKER) TO ALLOW FOR STRUCTURAL ROAD SECTION DRAINAGE.
7. **ADDITIONAL WIDTH SHALL BE PROVIDED WHERE TURN AND/OR BICYCLE LANES ARE REQUIRED BY THE DESIGN STANDARDS.**
8. A STRIPING AND SIGNAGE PLAN SHALL BE REQUIRED BY THE DEPARTMENT WHEN BIKE LANES, NO PARKING ZONES, SIGNAGE, AND PAVEMENT MARKINGS ARE A REQUIRED COMPONENT OF THE IMPROVEMENTS.

DEPARTMENT OF PUBLIC WORKS - STANDARD DRAWINGS

RURAL ROAD SECTION

>6,000 FUTURE ADT

Issued: August 2022	Scale: NTS
Revised:	Revision No:
Drawing No: A-1e	

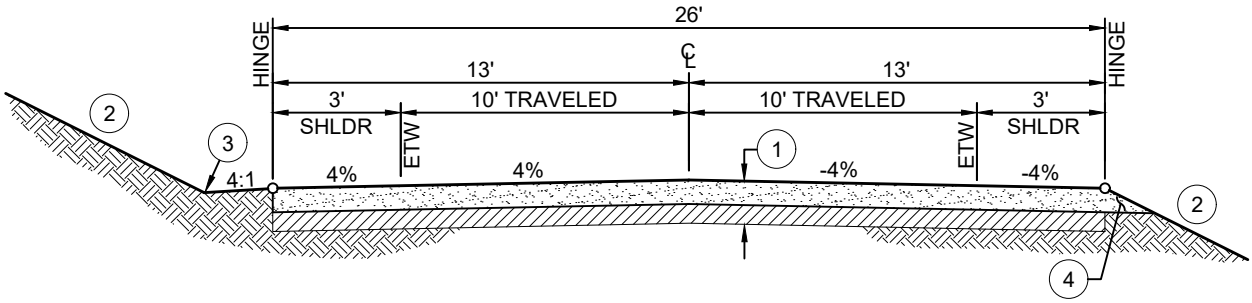

NOTES:

1. TYPICAL SECTION SHALL BE:
   - 4" MINIMUM CLASS II AGGREGATE BASE TO 95% RELATIVE COMPACTION FOR R≥40, OR
   - 6" MINIMUM CLASS II AGGREGATE BASE TO 95% RELATIVE COMPACTION FOR R<40, OVER
   - 12" MINIMUM SUBGRADE COMPACTED TO 95% RELATIVE COMPACTION

2. CUT AND FILL SLOPES SHALL NOT EXCEED 2 HORIZONTAL:1 VERTICAL (OR 3h:1v IN NATIVE SAND) WITHOUT PRIOR APPROVAL BY THE DEPARTMENT.

3. THE PROJECT ENGINEER SHALL ACCOMMODATE FOR ROADSIDE DRAINAGE SUCH THAT IT DOES NOT ERODE THE AGGREGATE SHOULDER. THE SIDE SLOPE OF ANY DRAINAGE SWALE DIRECTLY ADJACENT TO THE EDGE OF ROADWAY SHALL NOT EXCEED 4h:1v. DESIGN AND CONSTRUCTION SHALL BE TO THE SATISFACTION OF THE DEPARTMENT.

4. THE AGGREGATE BASE MATERIAL SHALL EXTEND TO THE EDGE OF THE FILL SLOPE (CHOKER) TO ALLOW FOR STRUCTURAL ROAD SECTION DRAINAGE.

DESIGN CRITERIA

	MIN. DESIGN SPEED	MIN. CURVE RADIUS	MAX. GRADE
FLAT	30 mph	275 ft	7%
ROLLING	20 mph	130 ft	12%
MOUNTAIN	15 mph	75 ft	12%

DESIGN CRITERIA NOTES:

1. OPTION FOR USE IN RURAL AND AGRICULTURAL LAND USE CATEGORIES WHERE THE 20 YEAR PROJECTED ADT DOES NOT EXCEED 100.

2. MINIMUM LONGITUDINAL SLOPE SHALL BE 0.50%.

3. GRADES GREATER THAN 12% SHALL REQUIRE PAVED SURFACES PER DRAWING A-1b AND THE FIRE AGENCY STANDARDS.

DEPARTMENT OF PUBLIC WORKS - STANDARD DRAWINGS

RURAL ROAD SECTION

GRAVEL ROAD

Issued: August 2022	Scale: NTS
Revised:	Revision No:
Drawing No: A-1f	

CRITERIA	ADT <500	ADT 500-1500	ADT 1500-6000	ADT >6000
DESIGN SPEED, MILES PER HOUR, (MINIMUM)				
FLAT	25	35	45	45
ROLLING	25	35	40	40
MOUNTAINOUS	20	30	35	35
CURVE RADIUS, FEET (MINIMUM)				
FLAT	250	600	1100	1100
ROLLING	250	600	800	800
MOUNTAINOUS	125	400	600	600
GRADE, PERCENT (MAXIMUM)				
FLAT	7	6	4	3
ROLLING	12	9	6	5
MOUNTAINOUS	15	13	8	7

NOTES:

1. AVERAGE DAILY TRIPS (ADT) IS BASED UPON A 20-YEAR PROJECTION.
2. SUPERELEVATION NOT PERMITTED ON URBAN ROADS.
3. THE STRUCTURAL SECTION SHALL BE BASED ON THE TRAFFIC INDEX AS PROVIDED BY THE DEPARTMENT.
4. RIGHT-OF-WAY SHALL BE THE MINIMUM REQUIRED BY THE DESIGN STANDARDS.

FLAT ROADWAYS ARE THOSE SECTIONS OF ROADWAY IN WHICH THERE ARE LITTLE OR NO TOPOGRAPHIC RESTRAINTS ON VERTICAL AND HORIZONTAL SIGHT DISTANCE AND WHICH COULD BE CONSTRUCTED WITH MINOR CUTS AND FILLS.

ROLLING ROADWAYS ARE THOSE SECTIONS OF ROADWAY IN WHICH THERE ARE TOPOGRAPHIC RESTRAINTS ON VERTICAL AND HORIZONTAL SIGHT DISTANCE WHICH REQUIRE SOME MODERATE CUTS AND FILLS.

MOUNTAINOUS ROADWAYS ARE THOSE SECTIONS OF ROADWAY WHICH REQUIRE MAXIMUM OR NEAR MAXIMUM GRADES AND MINIMUM CURVE RADII IN ORDER TO REDUCE THE CUTS AND FILLS TO PRACTICAL AND VISUALLY ACCEPTABLE HEIGHTS.

THE DETERMINATION OF FLAT, ROLLING, OR MOUNTAINOUS ROADWAYS SHALL BE UNIFORM OVER THE FULL LENGTH OF A ROADWAY EXCEPT WHERE THE DEPARTMENT DETERMINES THAT A SAFE TRANSITION MAY BE MADE.

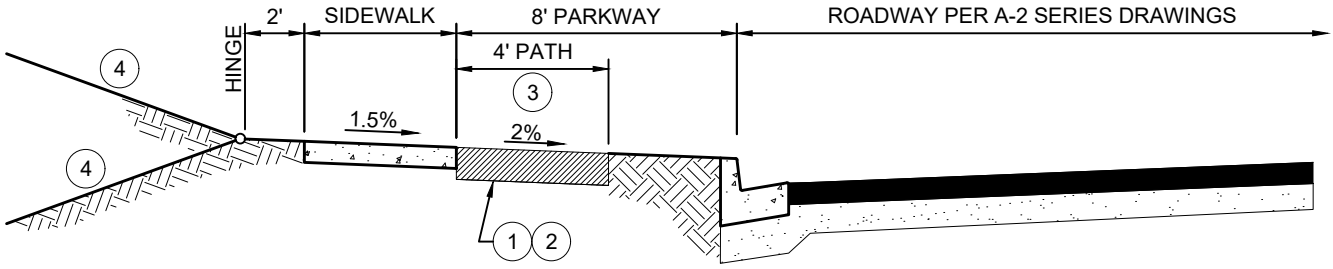

ATTACHED PATH

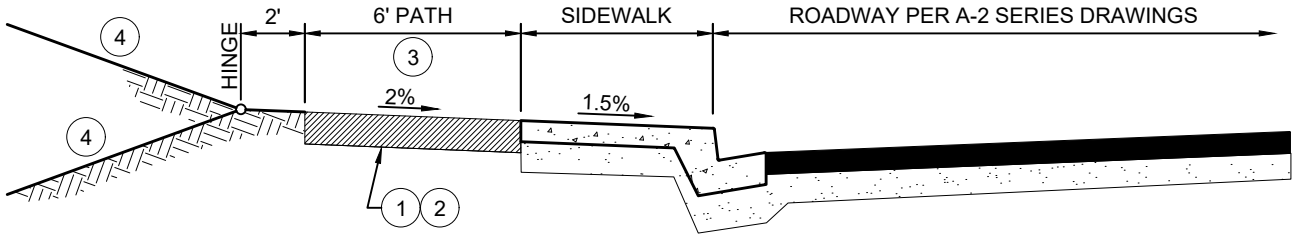

DETACHED PATH

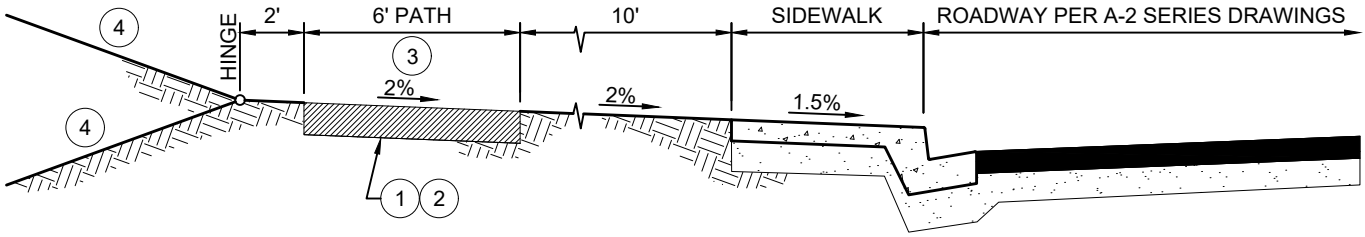

DETACHED PATH - ≥40mph & 3,000 ADT (5)

NOTES:

1. THE LONGITUDINAL GRADE OF THE DETACHED PATH SHALL MATCH THE ADJACENT ROADWAY GRADE.
2. PATH MATERIAL SHALL BE: 6-INCHES MINIMUM DEPTH ANGULAR DECOMPOSED GRANITE WITH A MAXIMUM AGGREGATE SIZE OF 3/8-INCH OR LESS AND COMPACTED TO A MINIMUM OF 90%. NATIVE SANDY MATERIAL MAY BE USED IF IT IS CONFINED EITHER BY THE ROADWAY OR BY AN APPROVED ROOT BARRIER INSTALLED ON BOTH SIDES OF PATH, CONSTRUCTED TO A MINIMUM DEPTH OF OF 24-INCHES, AND COMPACTED TO 90%. THE PATH SHALL BE TOLERANT TO NORMAL USE AND RESISTANT TO EROSION.
3. NO OBSTACLES OR AT-GRADE VAULTS SHALL BE LOCATED WITHIN THE LIMITS OF THE PATH. ADJACENT TO THE PATH THE FOLLOWING MINIMUM CLEARANCES TO OBSTACLES SHALL BE MAINTAINED:
   - MINIMUM OF 2' CLEARANCE ON EACH SIDE OF PATH.
   - MINIMUM OF 5' CLEARANCE FROM NEW TREES, SHRUBS, AND OTHER OBSTRUCTIONS.
   - MINIMUM OF 10' CLEARANCE FROM UNFENCED DRAINAGE BASINS.
   - MINIMUM OF 12' CLEARANCE TO OVERHEAD BRANCHES, SIGNS, AND OTHER ABOVE GRADE OBSTACLES.
4. CUT AND FILL SLOPES BEYOND HINGE POINTS SHALL NOT EXCEED 2 HORIZONTAL:1 VERTICAL (OR 3h:1v IN NATIVE SAND) AND SHALL BE STABILIZED WITH APPROPRIATE EROSION CONTROL.
5. ALL URBAN ROADS WITH PREVAILING SPEEDS OF 40 MPH OR GREATER AND AN ADT OF 3,000 OR GREATER SHALL REQUIRE A DETACHED PATH.
6. NO PORTION OF THE PATH SHALL BE USED AS PART OF A SURFACE DRAINAGE CONVEYANCE SYSTEM.
7. IF DRAINAGE FACILITIES ARE REQUIRED THEY SHALL BE EITHER STORM DRAIN PIPES OR A CONCRETE DRY CROSSING (DESIGN TO BE APPROVED BY THE DEPARTMENT).
8. PATH SIGNAGE MAY BE REQUIRED AND MUST HAVE PRIOR APPROVAL FROM THE COUNTY PARKS & RECREATION.

DEPARTMENT OF PUBLIC WORKS - STANDARD DRAWINGS

URBAN STREET SECTION
MULTIUSE PATH

Issued:	Scale:
August 2022	NTS
Revised:	Revision No:
Drawing No:	A-2a

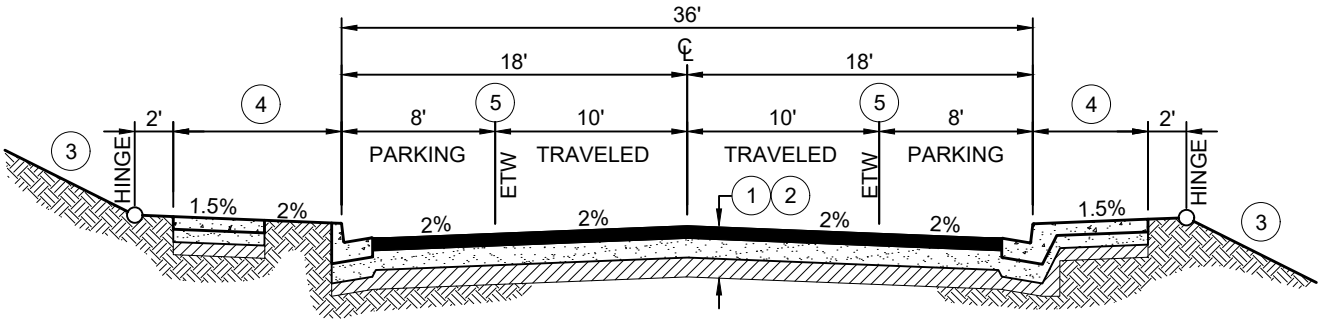

I: <500 FUTURE ADT-FLAT & ROLLING

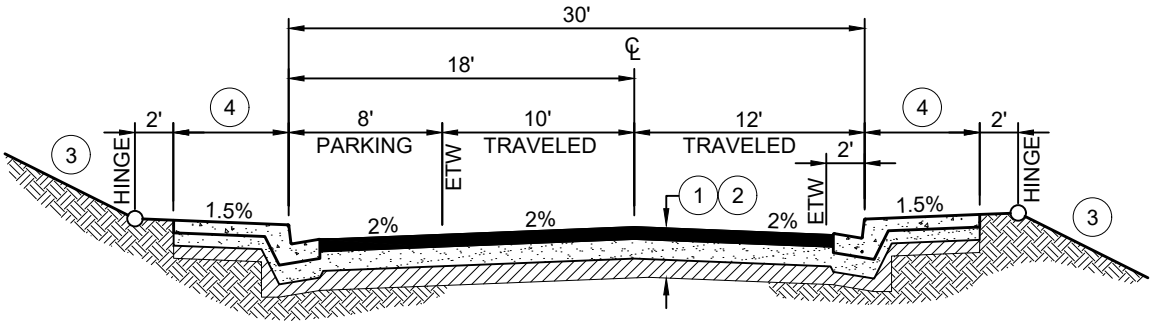

II: <500 FUTURE ADT-MOUNTAINOUS

NOTES:

1. THE STRUCTURAL ROAD SECTION SHALL BE DETERMINED AT THE TIME OF CONSTRUCTION BASED ON THE SUBGRADE R-VALUE AND THE TRAFFIC INDEX (TI) AS PROVIDED BY THE DEPARTMENT, AND IN NO CASE SHALL THE ZONE OF COMPACTION BE LESS THAN 2.5-FEET IN THICKNESS. THE ROAD SECTION SHALL BE APPROVED BY THE DEPARTMENT PRIOR TO CONSTRUCTION.
2. TYPICAL SECTION SHALL BE:
   - HOT MIX ASPHALT (HMA) PER THE DESIGN STANDARDS TO 95% RELATIVE COMPACTION, OVER
   - CLASS II AGGREGATE BASE TO 95% RELATIVE COMPACTION, OVER
   - 12" MINIMUM SUBGRADE TO 95% RELATIVE COMPACTION

   SUBGRADE AND AGGREGATE BASE COMPACTION REQUIREMENTS SHALL EXTEND TO THE BACK OF CURB OR TO THE BACK OF ATTACHED SIDEWALK (WHICHEVER CONDITION IS APPLICABLE).
3. CUT AND FILL SLOPES SHALL NOT EXCEED 2 HORIZONTAL:1 VERTICAL (OR 3h:1v IN NATIVE SAND) WITHOUT PRIOR APPROVAL BY THE DEPARTMENT.
4. ATTACHED OR DETACHED SIDEWALK TYPE AND WIDTH PER STANDARD DRAWING C-4 OR AS REQUIRED BY THE PROJECT CONDITIONS OF APPROVAL OR AREA SPECIFIC PLAN.
5. **ADDITIONAL WIDTH SHALL BE PROVIDED WHERE TURN AND/OR BICYCLE LANES ARE REQUIRED BY THE DESIGN STANDARDS.**
6. OTHER FACILITIES SUCH AS LANDSCAPING, TRANSIT STOP FACILITIES, PEDESTRIAN, EQUESTRIAN, AND BICYCLE FACILITIES MAY BE REQUIRED BY THE DESIGN STANDARDS.
7. LANDSCAPE, IRRIGATION, AND MAINTENANCE OF MEDIANS AND PARKWAYS SHALL BE ADDRESSED IN THE APPROVED PROJECT PLANS. A LOCAL FUNDING SOURCE MUST BE IDENTIFIED.
8. WHERE APPLICABLE, ALL IMPROVEMENTS SHALL BE CONSISTENT WITH THE RESPECTIVE COMMUNITY DESIGN PLAN AS ADOPTED BY THE BOARD OF SUPERVISORS.
9. A STRIPING AND SIGNAGE PLAN SHALL BE REQUIRED BY THE DEPARTMENT WHEN BIKE LANES, NO PARKING ZONES, SIGNAGE, AND PAVEMENT MARKINGS ARE A REQUIRED COMPONENT OF THE IMPROVEMENTS.

DEPARTMENT OF PUBLIC WORKS - STANDARD DRAWINGS

URBAN STREET SECTION

<500 FUTURE ADT

Issued:	Scale:
August 2022	NTS
Revised:	Revision No:
Drawing No:	A-2b

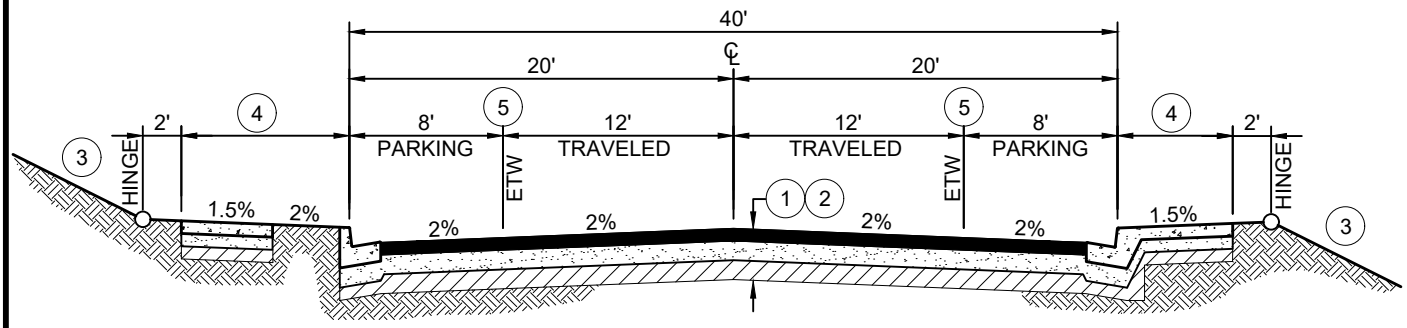

I: 500 TO 6,000 FUTURE ADT-FLAT

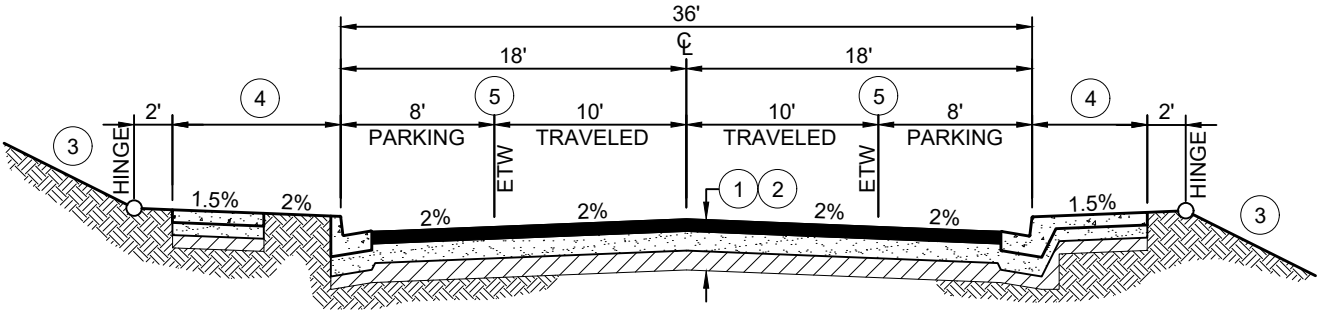

II: 500 TO 1,500 FUTURE ADT-ROLLING & MOUNTAINOUS

NOTES:

1. THE STRUCTURAL ROAD SECTION SHALL BE DETERMINED AT THE TIME OF CONSTRUCTION BASED ON THE SUBGRADE R-VALUE AND THE TRAFFIC INDEX (TI) AS PROVIDED BY THE DEPARTMENT, AND IN NO CASE SHALL THE ZONE OF COMPACTION BE LESS THAN 2.5-FEET IN THICKNESS. THE ROAD SECTION SHALL BE APPROVED BY THE DEPARTMENT PRIOR TO CONSTRUCTION.
2. TYPICAL SECTION SHALL BE:
   - HOT MIX ASPHALT (HMA) PER THE DESIGN STANDARDS TO 95% RELATIVE COMPACTION, OVER
   - CLASS II AGGREGATE BASE TO 95% RELATIVE COMPACTION, OVER
   - 12" MINIMUM SUBGRADE TO 95% RELATIVE COMPACTION

   SUBGRADE AND AGGREGATE BASE COMPACTION REQUIREMENTS SHALL EXTEND TO THE BACK OF CURB OR TO THE BACK OF ATTACHED SIDEWALK (WHICHEVER CONDITION IS APPLICABLE).
3. CUT AND FILL SLOPES SHALL NOT EXCEED 2 HORIZONTAL:1 VERTICAL (OR 3h:1v IN NATIVE SAND) WITHOUT PRIOR APPROVAL BY THE DEPARTMENT.
4. ATTACHED OR DETACHED SIDEWALK TYPE AND WIDTH PER STANDARD DRAWING C-4 OR AS REQUIRED BY THE PROJECT CONDITIONS OF APPROVAL OR AREA SPECIFIC PLAN.
5. **ADDITIONAL WIDTH SHALL BE PROVIDED WHERE TURN AND/OR BICYCLE LANES ARE REQUIRED BY THE DESIGN STANDARDS.**
6. OTHER FACILITIES SUCH AS LANDSCAPING, TRANSIT STOP FACILITIES, PEDESTRIAN, EQUESTRIAN, AND BICYCLE FACILITIES MAY BE REQUIRED BY THE DESIGN STANDARDS.
7. LANDSCAPE, IRRIGATION, AND MAINTENANCE OF MEDIANS AND PARKWAYS SHALL BE ADDRESSED IN THE APPROVED PROJECT PLANS. A LOCAL FUNDING SOURCE MUST BE IDENTIFIED.
8. WHERE APPLICABLE, ALL IMPROVEMENTS SHALL BE CONSISTENT WITH THE RESPECTIVE COMMUNITY DESIGN PLAN AS ADOPTED BY THE BOARD OF SUPERVISORS.
9. A STRIPING AND SIGNAGE PLAN SHALL BE REQUIRED BY THE DEPARTMENT WHEN BIKE LANES, NO PARKING ZONES, SIGNAGE, AND PAVEMENT MARKINGS ARE A REQUIRED COMPONENT OF THE IMPROVEMENTS.

DEPARTMENT OF PUBLIC WORKS - STANDARD DRAWINGS

URBAN STREET SECTION

500 TO 6,000 FUTURE ADT

Issued:	Scale:
August 2022	NTS
Revised:	Revision No:
Drawing No:	A-2c

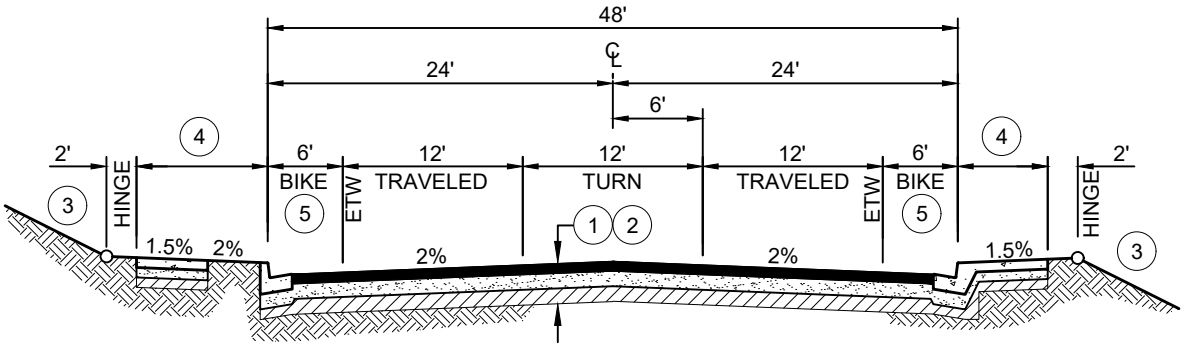

I: >6,000 TO 16,000 FUTURE ADT WITHOUT PARKING

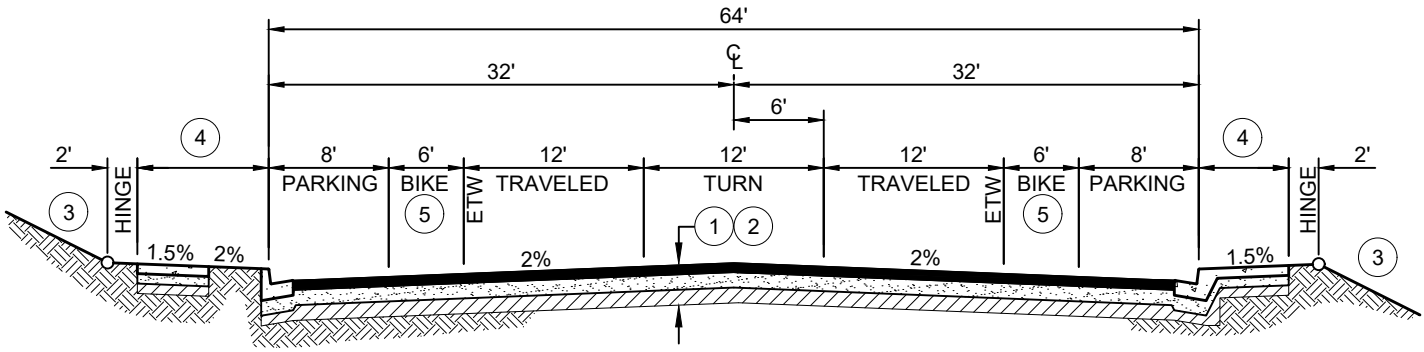

II: >6,000 TO 16,000 FUTURE ADT WITH PARKING

NOTES:

1. THE STRUCTURAL ROAD SECTION SHALL BE DETERMINED AT THE TIME OF CONSTRUCTION BASED ON THE SUBGRADE R-VALUE AND THE TRAFFIC INDEX (TI) AS PROVIDED BY THE DEPARTMENT, AND IN NO CASE SHALL THE ZONE OF COMPACTION BE LESS THAN 2.5-FEET IN THICKNESS. THE ROAD SECTION SHALL BE APPROVED BY THE DEPARTMENT PRIOR TO CONSTRUCTION.
2. TYPICAL SECTION SHALL BE:
   - HOT MIX ASPHALT (HMA) PER THE DESIGN STANDARDS TO 95% RELATIVE COMPACTION, OVER
   - CLASS II AGGREGATE BASE TO 95% RELATIVE COMPACTION, OVER
   - 12" MINIMUM SUBGRADE TO 95% RELATIVE COMPACTION

   SUBGRADE AND AGGREGATE BASE COMPACTION REQUIREMENTS SHALL EXTEND TO THE BACK OF CURB OR TO THE BACK OF ATTACHED SIDEWALK (WHICHEVER CONDITION IS APPLICABLE).
3. CUT AND FILL SLOPES SHALL NOT EXCEED 4 HORIZONTAL:1 VERTICAL WITHIN THE PUBLIC ROW WITHOUT PRIOR APPROVAL BY THE DEPARTMENT.
4. ATTACHED OR DETACHED SIDEWALK TYPE AND WIDTH PER STANDARD DRAWING C-4 OR AS REQUIRED BY THE PROJECT CONDITIONS OF APPROVAL OR AREA SPECIFIC PLAN.
5. OTHER FACILITIES SUCH AS LANDSCAPING, TRANSIT STOP FACILITIES, PEDESTRIAN, EQUESTRIAN, AND BICYCLE FACILITIES MAY BE REQUIRED BY THE DESIGN STANDARDS.
6. LANDSCAPE, IRRIGATION, AND MAINTENANCE OF MEDIANS AND PARKWAYS SHALL BE ADDRESSED IN THE APPROVED PROJECT PLANS. A LOCAL FUNDING SOURCE MUST BE IDENTIFIED.
7. WHERE APPLICABLE, ALL IMPROVEMENTS SHALL BE CONSISTENT WITH THE RESPECTIVE COMMUNITY DESIGN PLAN AS ADOPTED BY THE BOARD OF SUPERVISORS.
8. A STRIPING AND SIGNAGE PLAN SHALL BE REQUIRED BY THE DEPARTMENT WHEN BIKE LANES, NO PARKING ZONES, SIGNAGE, AND PAVEMENT MARKINGS ARE A REQUIRED COMPONENT OF THE IMPROVEMENTS.

DEPARTMENT OF PUBLIC WORKS - STANDARD DRAWINGS

URBAN STREET SECTION
>6,000 TO 16,000 FUTURE ADT

Issued:	Scale:
August 2022	NTS
Revised:	Revision No:
Drawing No:	A-2d

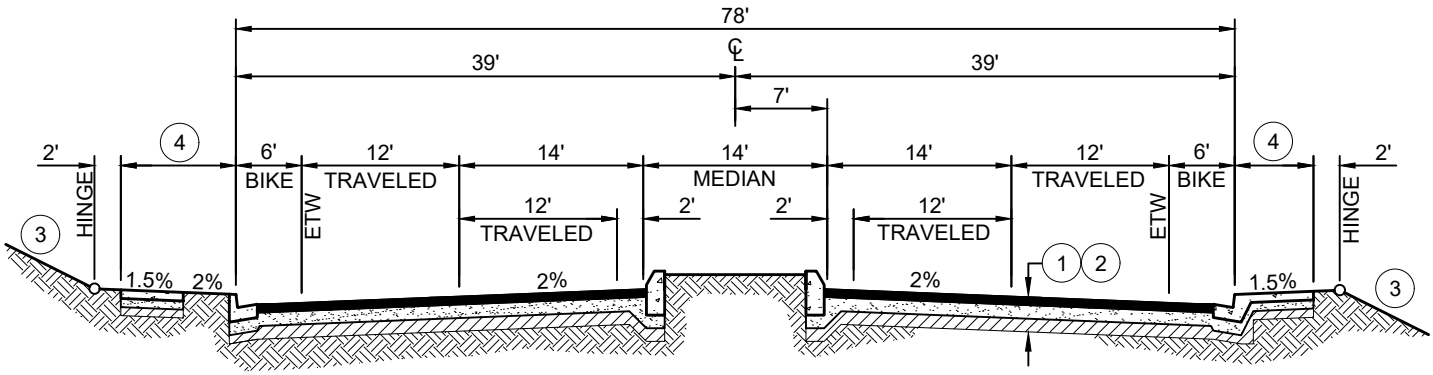

>16,000 TO 24,000 FUTURE ADT

NOTES:

1. THE STRUCTURAL ROAD SECTION SHALL BE DETERMINED AT THE TIME OF CONSTRUCTION BASED ON THE SUBGRADE R-VALUE AND THE TRAFFIC INDEX (TI) AS PROVIDED BY THE DEPARTMENT, AND IN NO CASE SHALL THE ZONE OF COMPACTION BE LESS THAN 2.5-FEET IN THICKNESS. THE ROAD SECTION SHALL BE APPROVED BY THE DEPARTMENT PRIOR TO CONSTRUCTION.
2. TYPICAL SECTION SHALL BE:
   - HOT MIX ASPHALT (HMA) PER THE DESIGN STANDARDS TO 95% RELATIVE COMPACTION, OVER
   - CLASS II AGGREGATE BASE TO 95% RELATIVE COMPACTION, OVER
   - 12" MINIMUM SUBGRADE TO 95% RELATIVE COMPACTION

   SUBGRADE AND AGGREGATE BASE COMPACTION REQUIREMENTS SHALL EXTEND TO THE BACK OF CURB OR TO THE BACK OF ATTACHED SIDEWALK (WHICHEVER CONDITION IS APPLICABLE).
3. CUT AND FILL SLOPES SHALL NOT EXCEED 4 HORIZONTAL:1 VERTICAL WITHIN THE PUBLIC ROW WITHOUT PRIOR APPROVAL BY THE DEPARTMENT.
4. ATTACHED OR DETACHED SIDEWALK TYPE AND WIDTH PER STANDARD DRAWING C-4 OR AS REQUIRED BY THE PROJECT CONDITIONS OF APPROVAL OR AREA SPECIFIC PLAN.
5. WHEN STREET PARKING IS REQUIRED, A MINIMUM WIDTH OF 8-FEET SHALL BE PROVIDED.
6. OTHER FACILITIES SUCH AS LANDSCAPING, TRANSIT STOP FACILITIES, PEDESTRIAN, EQUESTRIAN, AND BICYCLE FACILITIES MAY BE REQUIRED BY THE DESIGN STANDARDS.
7. LANDSCAPE, IRRIGATION, AND MAINTENANCE OF MEDIANS AND PARKWAYS SHALL BE ADDRESSED IN THE APPROVED PROJECT PLANS. A LOCAL FUNDING SOURCE MUST BE IDENTIFIED.
8. WHERE APPLICABLE, ALL IMPROVEMENTS SHALL BE CONSISTENT WITH THE RESPECTIVE COMMUNITY DESIGN PLAN AS ADOPTED BY THE BOARD OF SUPERVISORS.
9. A STRIPING AND SIGNAGE PLAN SHALL BE REQUIRED BY THE DEPARTMENT WHEN BIKE LANES, NO PARKING ZONES, SIGNAGE, AND PAVEMENT MARKINGS ARE A REQUIRED COMPONENT OF THE IMPROVEMENTS.

DEPARTMENT OF PUBLIC WORKS - STANDARD DRAWINGS

URBAN STREET SECTION

>16,000 TO 24,000 FUTURE ADT

Issued:	Scale:
August 2022	NTS
Revised:	Revision No:
Drawing No:	A-2e

CRITERIA	ADT <500	ADT 500-1500	ADT 1500-5000	ADT >5000
DESIGN SPEED, MILES PER HOUR, (MINIMUM)				
FLAT	25	30	35	35
ROLLING	25	30	30	30
MOUNTAINOUS	20	25	25	25
CURVE RADIUS, FT. (MINIMUM)				
FLAT	250	400	600	600
ROLLING	250	400	400	400
MOUNTAINOUS	125	250	250	250
GRADE, PERCENT (MAXIMUM)				
FLAT	7	6	4	3
ROLLING	10	9	6	5
MOUNTAINOUS	10	9	8	7

NOTES:

1. AVERAGE DAILY TRIPS (ADT) IS BASED UPON A 20-YEAR PROJECTION.
2. SUPERELEVATION NOT PERMITTED ON COMMERCIAL / INDUSTRIAL ROADS.
3. THE STRUCTURAL SECTION SHALL BE BASED ON THE TRAFFIC INDEX AS PROVIDED BY THE DEPARTMENT.
4. RIGHT-OF-WAY SHALL BE THE MINIMUM REQUIRED BY THE DESIGN STANDARDS.

FLAT ROADWAYS ARE THOSE SECTIONS OF ROADWAY IN WHICH THERE ARE LITTLE OR NO TOPOGRAPHIC RESTRAINTS ON VERTICAL AND HORIZONTAL SIGHT DISTANCE AND WHICH COULD BE CONSTRUCTED WITH MINOR CUTS AND FILLS.

ROLLING ROADWAYS ARE THOSE SECTIONS OF ROADWAY IN WHICH THERE ARE TOPOGRAPHIC RESTRAINTS ON VERTICAL AND HORIZONTAL SIGHT DISTANCE WHICH REQUIRE SOME MODERATE CUTS AND FILLS.

MOUNTAINOUS ROADWAYS ARE THOSE SECTIONS OF ROADWAY WHICH REQUIRE MAXIMUM OR NEAR MAXIMUM GRADES AND MINIMUM CURVE RADII IN ORDER TO REDUCE THE CUTS AND FILLS TO PRACTICAL AND VISUALLY ACCEPTABLE HEIGHTS.

THE DETERMINATION OF FLAT, ROLLING, OR MOUNTAINOUS ROADWAYS SHALL BE UNIFORM OVER THE FULL LENGTH OF A ROADWAY EXCEPT WHERE THE DEPARTMENT DETERMINES THAT A SAFE TRANSITION MAY BE MADE.

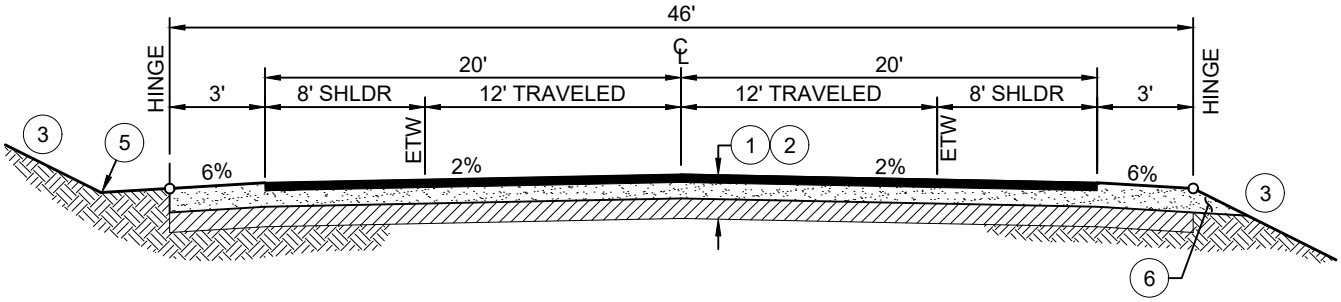

I: <5,000 FUTURE ADT WITHOUT HMA DIKE
OUTSIDE URL

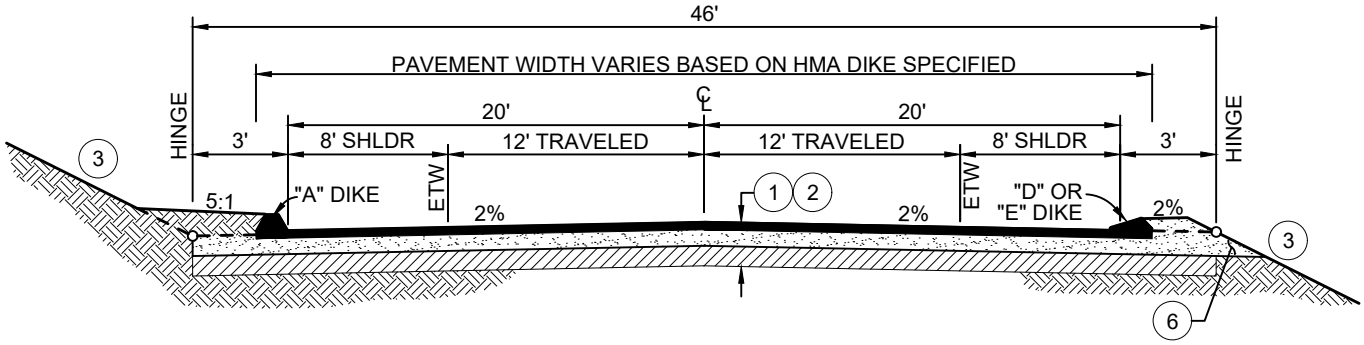

II: <5,000 FUTURE ADT WITH HMA DIKE (4)
OUTSIDE URL

NOTES:

1. THE STRUCTURAL ROAD SECTION SHALL BE DETERMINED AT THE TIME OF CONSTRUCTION BASED ON THE SUBGRADE R-VALUE AND THE TRAFFIC INDEX (TI) AS PROVIDED BY THE DEPARTMENT, AND IN NO CASE SHALL THE ZONE OF COMPACTION BE LESS THAN 2.5-FEET IN THICKNESS. THE ROAD SECTION SHALL BE APPROVED BY THE DEPARTMENT PRIOR TO CONSTRUCTION.
2. TYPICAL SECTION SHALL BE:
   - HOT MIX ASPHALT (HMA) PER THE DESIGN STANDARDS TO 95% RELATIVE COMPACTION, OVER
   - CLASS II AGGREGATE BASE TO 95% RELATIVE COMPACTION, OVER
   - 12" MINIMUM SUBGRADE TO 95% RELATIVE COMPACTION
3. CUT AND FILL SLOPES SHALL NOT EXCEED 2 HORIZONTAL:1 VERTICAL (OR 3h:1v IN NATIVE SAND) WITHOUT PRIOR APPROVAL BY THE DEPARTMENT.
4. HMA DIKE REQUIREMENTS PER C-6.
5. THE PROJECT ENGINEER SHALL ACCOMMODATE FOR ROADSIDE DRAINAGE SUCH THAT IT DOES NOT ERODE THE AGGREGATE SHOULDER. THE SIDE SLOPE OF ANY DRAINAGE SWALE DIRECTLY ADJACENT TO THE EDGE OF ROADWAY SHALL NOT EXCEED 4h:1v. DESIGN AND CONSTRUCTION SHALL BE TO THE SATISFACTION OF THE DEPARTMENT.
6. THE AGGREGATE BASE MATERIAL SHALL EXTEND TO THE EDGE OF THE FILL SLOPE (CHOKER) TO ALLOW FOR STRUCTURAL ROAD SECTION DRAINAGE.
7. A STRIPING AND SIGNAGE PLAN SHALL BE REQUIRED BY THE DEPARTMENT WHEN BIKE LANES, NO PARKING ZONES, SIGNAGE, AND PAVEMENT MARKINGS ARE A REQUIRED COMPONENT OF THE IMPROVEMENTS.

DEPARTMENT OF PUBLIC WORKS - STANDARD DRAWINGS

COMMERCIAL ROAD SECTION
<5,000 FUTURE ADT

Issued:	Scale:
August 2022	NTS
Revised:	Revision No:
Drawing No:	A-3a

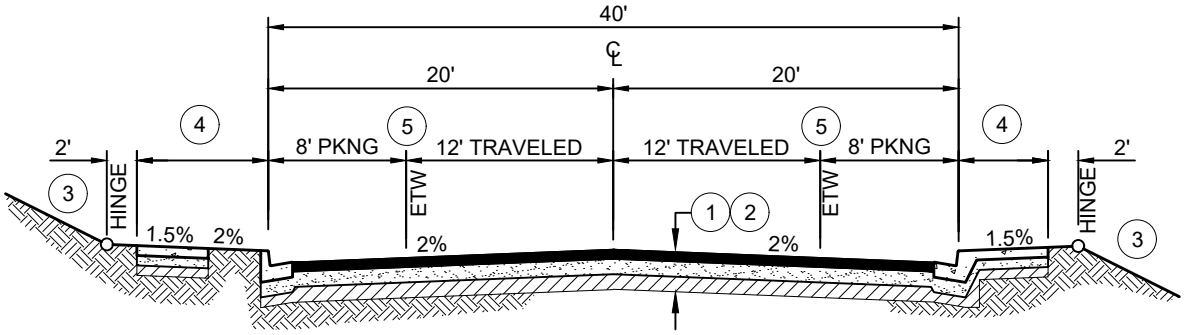

I: LESS THAN 5,000 FUTURE ADT
INSIDE URL

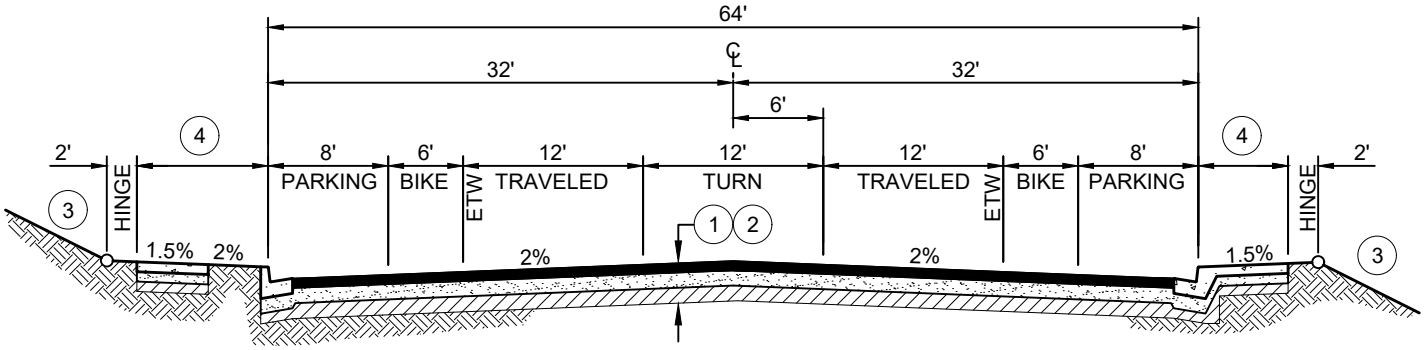

II: 5,000 TO 16,000 FUTURE ADT
INSIDE URL

NOTES:

1. THE STRUCTURAL ROAD SECTION SHALL BE DETERMINED AT THE TIME OF CONSTRUCTION BASED ON THE SUBGRADE R-VALUE AND THE TRAFFIC INDEX (TI) AS PROVIDED BY THE DEPARTMENT, AND IN NO CASE SHALL THE ZONE OF COMPACTION BE LESS THAN 2.5-FEET IN THICKNESS. THE ROAD SECTION SHALL BE APPROVED BY THE DEPARTMENT PRIOR TO CONSTRUCTION.
2. TYPICAL SECTION SHALL BE:
   - HOT MIX ASPHALT (HMA) PER THE DESIGN STANDARDS TO 95% RELATIVE COMPACTION, OVER
   - CLASS II AGGREGATE BASE TO 95% RELATIVE COMPACTION, OVER
   - 12" MINIMUM SUBGRADE TO 95% RELATIVE COMPACTION

   SUBGRADE AND AGGREGATE BASE COMPACTION REQUIREMENTS SHALL EXTEND TO THE BACK OF CURB OR TO THE BACK OF ATTACHED SIDEWALK (WHICHEVER CONDITION IS APPLICABLE).
3. CUT AND FILL SLOPES SHALL NOT EXCEED 4 HORIZONTAL:1 VERTICAL WITHIN THE PUBLIC ROW WITHOUT PRIOR APPROVAL BY THE DEPARTMENT.
4. ATTACHED OR DETACHED SIDEWALK TYPE AND WIDTH PER STANDARD DRAWING C-4 OR AS REQUIRED BY THE PROJECT CONDITIONS OF APPROVAL OR AREA SPECIFIC PLAN.
5. **ADDITIONAL WIDTH SHALL BE PROVIDED WHERE BICYCLE LANES ARE REQUIRED BY THE DESIGN STANDARDS.**
6. OTHER FACILITIES SUCH AS LANDSCAPING, TRANSIT STOP FACILITIES, PEDESTRIAN, EQUESTRIAN, AND BICYCLE FACILITIES MAY BE REQUIRED BY THE DESIGN STANDARDS.
7. LANDSCAPE, IRRIGATION, AND MAINTENANCE OF MEDIANS AND PARKWAYS SHALL BE ADDRESSED IN THE APPROVED PROJECT PLANS. A LOCAL FUNDING SOURCE MUST BE IDENTIFIED.
8. WHERE APPLICABLE, ALL IMPROVEMENTS SHALL BE CONSISTENT WITH THE RESPECTIVE COMMUNITY DESIGN PLAN AS ADOPTED BY THE BOARD OF SUPERVISORS.
9. A STRIPING AND SIGNAGE PLAN SHALL BE REQUIRED BY THE DEPARTMENT WHEN BIKE LANES, NO PARKING ZONES, SIGNAGE, AND PAVEMENT MARKINGS ARE A REQUIRED COMPONENT OF THE IMPROVEMENTS.

DEPARTMENT OF PUBLIC WORKS - STANDARD DRAWINGS

COMMERCIAL STREET SECTION
5,000 TO 16,000 FUTURE ADT

Issued:	Scale:
August 2022	NTS
Revised:	Revision No:
Drawing No:	A-3b

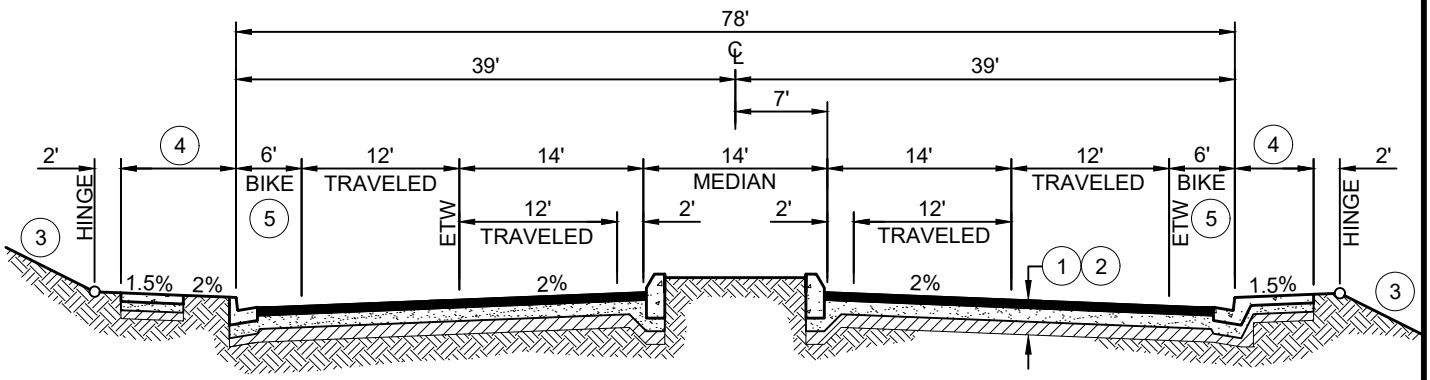

>16,000 FUTURE ADT - WITHIN URL

NOTES:

1. THE STRUCTURAL ROAD SECTION SHALL BE DETERMINED AT THE TIME OF CONSTRUCTION BASED ON THE SUBGRADE R-VALUE AND THE TRAFFIC INDEX (TI) AS PROVIDED BY THE DEPARTMENT, AND IN NO CASE SHALL THE ZONE OF COMPACTION BE LESS THAN 2.5-FEET IN THICKNESS. THE ROAD SECTION SHALL BE APPROVED BY THE DEPARTMENT PRIOR TO CONSTRUCTION.
2. TYPICAL SECTION SHALL BE:
   - HOT MIX ASPHALT (HMA) PER THE DESIGN STANDARDS TO 95% RELATIVE COMPACTION, OVER
   - CLASS II AGGREGATE BASE TO 95% RELATIVE COMPACTION, OVER
   - 12" MINIMUM SUBGRADE TO 95% RELATIVE COMPACTION

   SUBGRADE AND AGGREGATE BASE COMPACTION REQUIREMENTS SHALL EXTEND TO THE BACK OF CURB OR TO THE BACK OF ATTACHED SIDEWALK (WHICHEVER CONDITION IS APPLICABLE).
3. CUT AND FILL SLOPES SHALL NOT EXCEED 4 HORIZONTAL:1 VERTICAL WITHIN THE PUBLIC ROW WITHOUT PRIOR APPROVAL BY THE DEPARTMENT.
4. ATTACHED OR DETACHED SIDEWALK TYPE AND WIDTH PER STANDARD DRAWING C-4 OR AS REQUIRED BY THE PROJECT CONDITIONS OF APPROVAL OR AREA SPECIFIC PLAN.
5. OTHER FACILITIES SUCH AS LANDSCAPING, TRANSIT STOP FACILITIES, PEDESTRIAN, EQUESTRIAN, AND BICYCLE FACILITIES MAY BE REQUIRED BY THE DESIGN STANDARDS.
6. LANDSCAPE, IRRIGATION, AND MAINTENANCE OF MEDIANS AND PARKWAYS SHALL BE ADDRESSED IN THE APPROVED PROJECT PLANS. A LOCAL FUNDING SOURCE MUST BE IDENTIFIED.
7. WHERE APPLICABLE, ALL IMPROVEMENTS SHALL BE CONSISTENT WITH THE RESPECTIVE COMMUNITY DESIGN PLAN AS ADOPTED BY THE BOARD OF SUPERVISORS.
8. A STRIPING AND SIGNAGE PLAN SHALL BE REQUIRED BY THE DEPARTMENT WHEN BIKE LANES, NO PARKING ZONES, SIGNAGE, AND PAVEMENT MARKINGS ARE A REQUIRED COMPONENT OF THE IMPROVEMENTS.

DEPARTMENT OF PUBLIC WORKS - STANDARD DRAWINGS

COMMERCIAL STREET SECTION

>16,000 FUTURE ADT

Issued: August 2022	Scale: NTS
Revised:	Revision No:
Drawing No: A-3c	

REFERENCE: STATE HIGHWAY DESIGN MANUAL 7th EDITION FIGURE 201.5

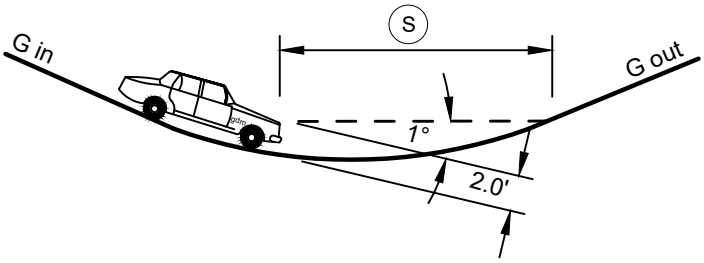

L = CURVE LENGTH (FEET)
A = ALGEBRAIC GRADE DIFFERENCE, Gout% - Gin%
S = SIGHT DISTANCE (FEET)
V = DESIGN SPEED FOR "S" (MPH)
K = DISTANCE IN FEET REQUIRED TO ACHIEVE A 1% CHANGE IN GRADE.
K VALUE AS SHOWN ON GRAPH IS VALID WHEN S < L.

WHEN S > L

$$L = 2S - \frac{400 + 3.5S}{A}$$

WHEN S < L

$$L = \frac{AS^2}{400 + 3.5S}$$

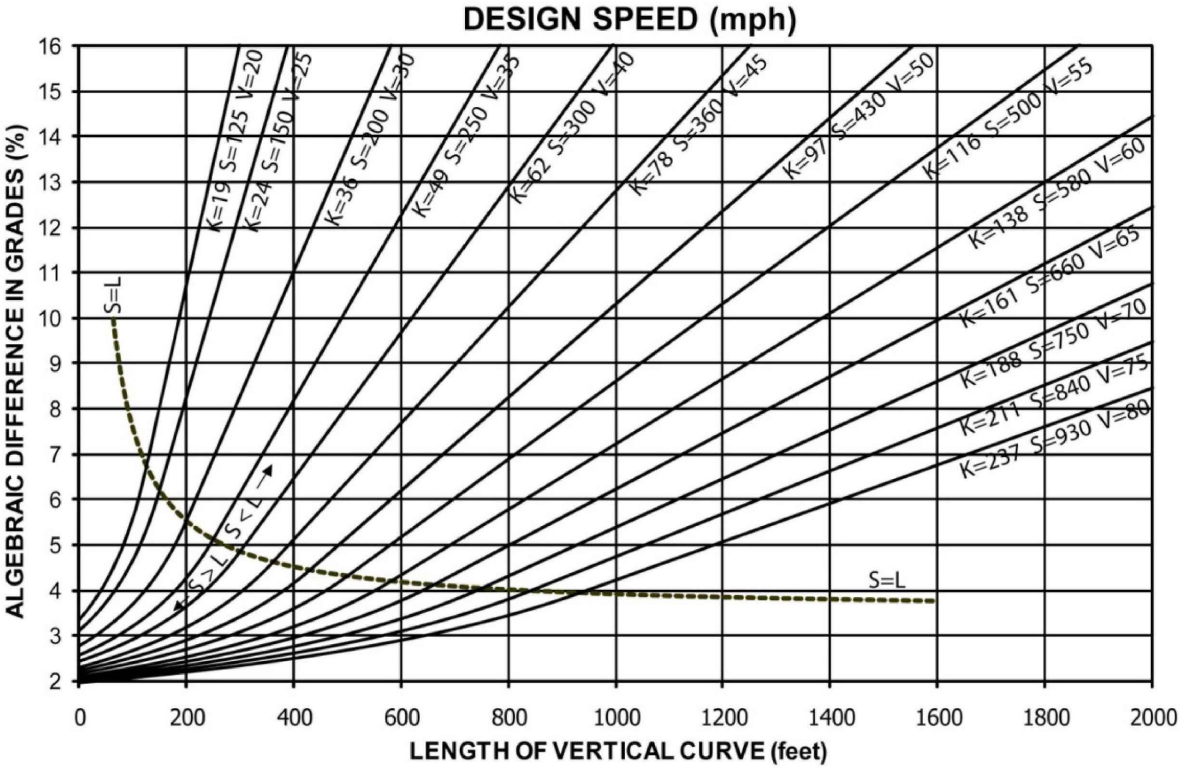

DEPARTMENT OF PUBLIC WORKS - STANDARD DRAWINGS

ROAD/STREET DESIGN

SAG VERTICAL CURVE

Issued: August 2022	Scale: NTS
Revised:	Revision No:
Drawing No: A-4	

REFERENCE: STATE HIGHWAY DESIGN MANUAL 7th EDITION FIGURE 201.4

HEIGHT OF DRIVERS EYE IS 3.5 FEET.
HEIGHT OF OBJECT IS 0.5 FEET.

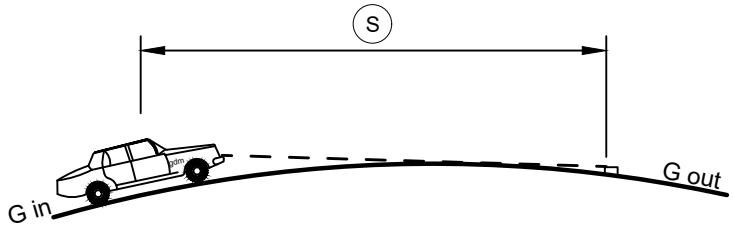

L = CURVE LENGTH (FEET)
A = ALGEBRAIC GRADE DIFFERENCE, Gout% - G in%
S = SIGHT DISTANCE (FEET)
V = DESIGN SPEED IN FOR "S" (MPH)
K = DISTANCE IN FEET REQUIRED TO ACHIEVE A 1% CHANGE IN GRADE.
K VALUE AS SHOWN ON GRAPH IS VALID WHEN S < L.

WHEN S > L

$$L = 2S - \frac{1329}{A}$$

WHEN S < L

$$L = \frac{AS^2}{1329}$$

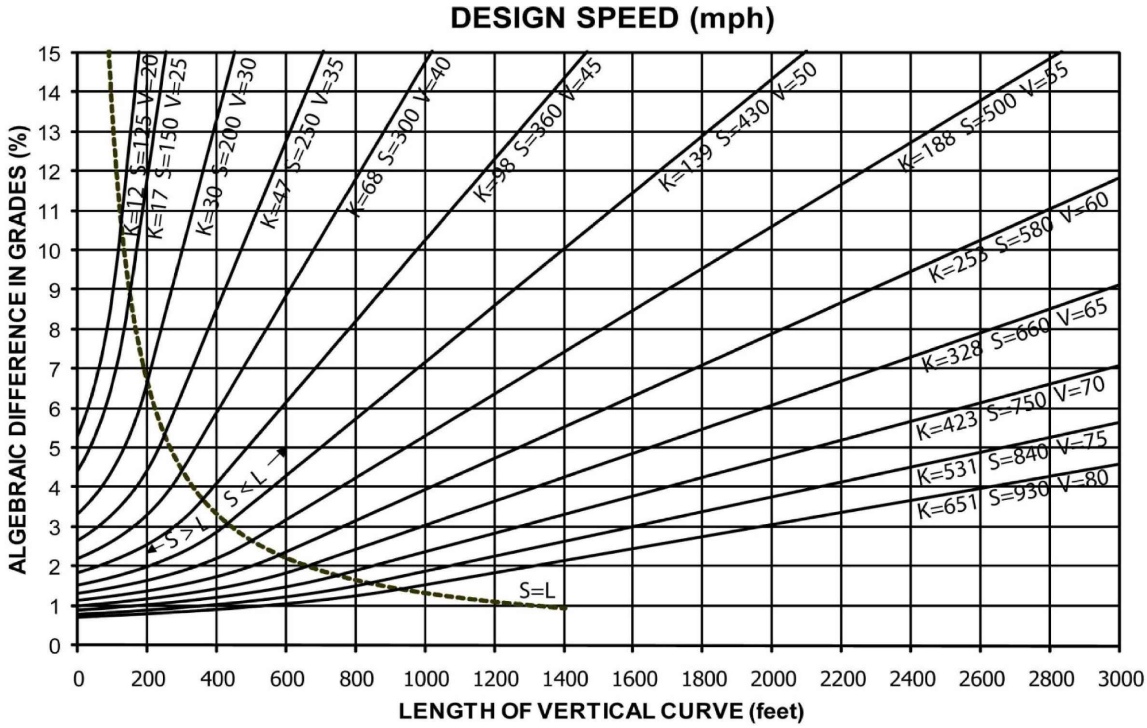

DEPARTMENT OF PUBLIC WORKS - STANDARD DRAWINGS

ROAD/STREET DESIGN

CREST VERTICAL CURVE

Issued: August 2022	Scale: NTS
Revised:	Revision No:
Drawing No: A-4a	

FOR RURAL ROADS - LESS THAN 35 MPH	
CURVE RADIUS - FEET	SUPER-ELEVATION - %
Under 500	+4%
500-1,000	+3%
1,000-5,000	+2%
Over 5,000	Standard crown section

FOR RURAL ROADS - 35 MPH to 45 MPH	
CURVE RADIUS - FEET	SUPER-ELEVATION - %
Under 600	+6%
600-1,000	+5%
1,000-1,500	+4%
1,500-2,000	+3%
2,000-7,000	+2%
Over 7,000	Standard crown section

FOR RURAL ROADS - OVER 45 MPH	
CURVE RADIUS - FEET	SUPER-ELEVATION - %
Under 1,100	+10%
1,100-1,350	+9%
1,350-1,600	+8%
1,600-1,900	+7%
1,900-2,200	+6%
2,200-2,700	+5%
2,700-3,500	+4%
3,500-4,500	+3%
4,500-20,000	+2%
Over 20,000	Standard crown section

NOTES:
1. THIS TABLE CONTAINS THE STANDARD RADII AND SPEEDS FOR THE USE OF SUPERELEVATIONS ON RURAL COUNTY ROADS.
2. SUPERELEVATIONS GREATER THAN 10% ARE NOT ALLOWED WITHOUT THE APPROVAL OF THE DEPARTMENT.
3. WHEN USING SUPERELEVATIONS, THE DESIGN SHALL BE BASED ON THE CALTRANS HIGHWAY DESIGN MANUAL WHICH PROVIDES INFORMATION ON HORIZONTAL AND VERTICAL ALIGNMENTS, TRANSITIONS, THE AXIS OF ROTATION, DRAINAGE AND OTHER PERTINENT INFORMATION.
4. SUPERELEVATION DIAGRAMS SHALL BE PROVIDED ON THE APPROVED PLANS.
5. SUPERELEVATION IN URBAN AREAS SHALL NOT EXCEED +4.0%.

REFERENCE: STATE HIGHWAY
DESIGN MANUAL 7th EDITION
FIGURE 201.6

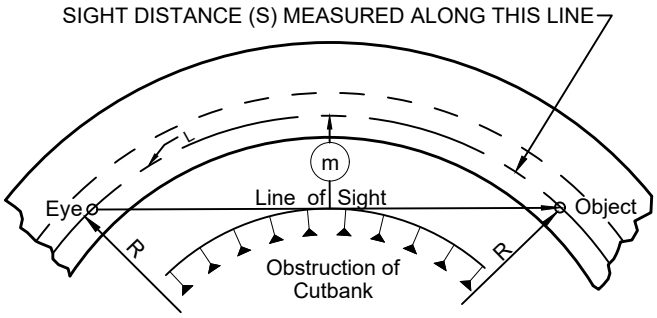

LINE OF SIGHT IS 2.0 FEET ABOVE CENTERLINE INSIDE LANE AT POINT OF OBSTRUCTION.

S = SIGHT DISTANCE (FEET)
R = RADIUS OF THE CENTERLINE OF THE LANE NEAREST THE OBSTRUCTION (FEET)
V = DESIGN SPEED FOR "S" (MPH)
m = CLEAR DISTANCE FROM CENTERLINE OF THE LANE NEAREST THE OBSTRUCTION (FEET)

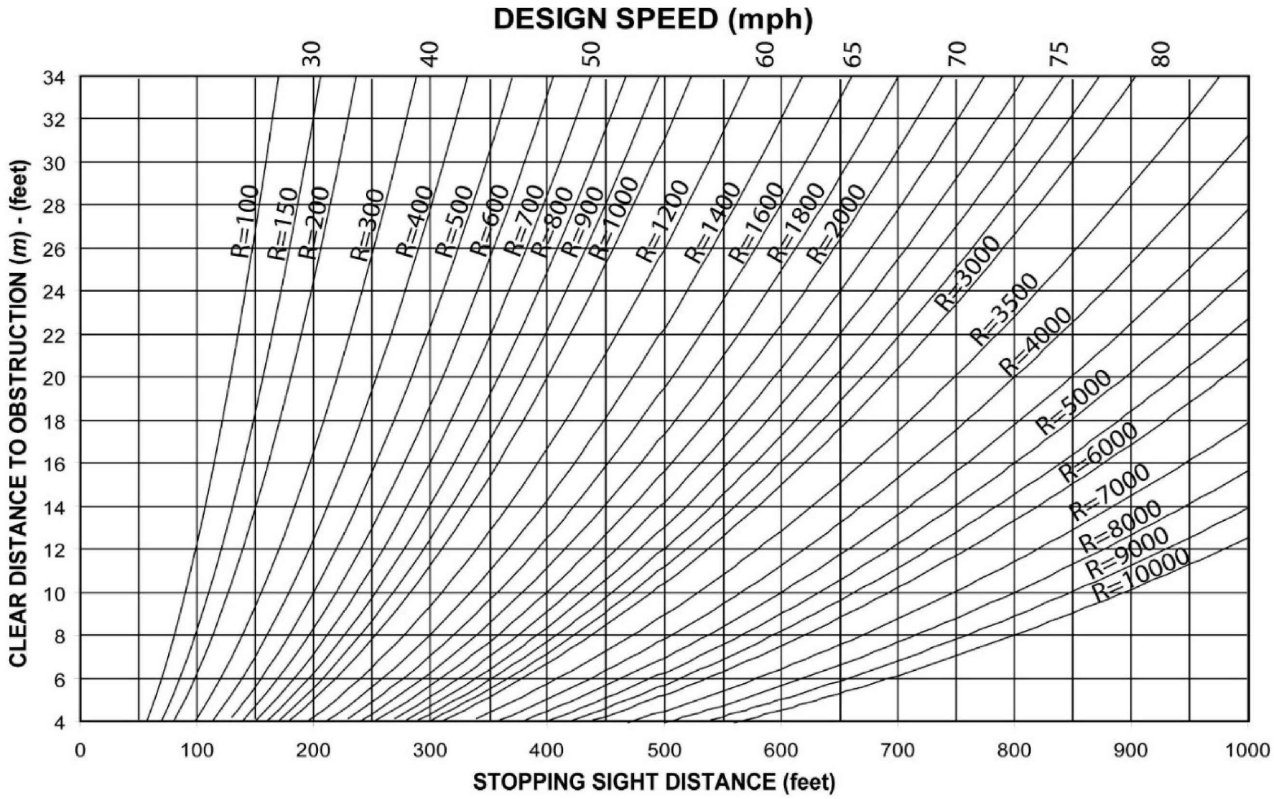

DEPARTMENT OF PUBLIC WORKS - STANDARD DRAWINGS

STOPPING SIGHT DISTANCE
HORIZONTAL CURVES

Issued: August 2022	Scale: NTS
Revised:	Revision No:
Drawing No: A-5	

DESIGN SPEED (MPH)	"S" SIGHT DISTANCE (FEET)	DESIGN SPEED (MPH)	"S" SIGHT DISTANCE (FEET)
20	220	40	440
25	275	45	495
30	330	50	550
35	385	55	605

NOTES:

1. INTERSECTION AND DRIVEWAY PASSENGER VEHICLE CORNER SIGHT DISTANCE REQUIREMENTS ON COUNTY MAINTAINED ROADS. REFERENCE HIGHWAY DESIGN MANUAL, CHAPTER 400, TOPIC 405, CORNER SIGHT DISTANCE.
2. LINE OF SIGHT IS FROM A POINT AT THE INTERSECTION OR DRIVEWAY WHICH IS 3.5-FEET HIGH (EYE HEIGHT) AND 8-FEET BEHIND THE EDGE OF TRAVELED WAY, TO A POINT THAT IS 3.5-FEET HIGH AND LOCATED AT THE CENTER OF THE APPROACHING LANE, BOTH WAYS.
3. NO OBSTRUCTION OF THE LINE OF SIGHT SHALL BE ALLOWED WITHIN THE VERTICAL CLEAR ZONE BETWEEN 2.5-FEET AND 8-FEET.

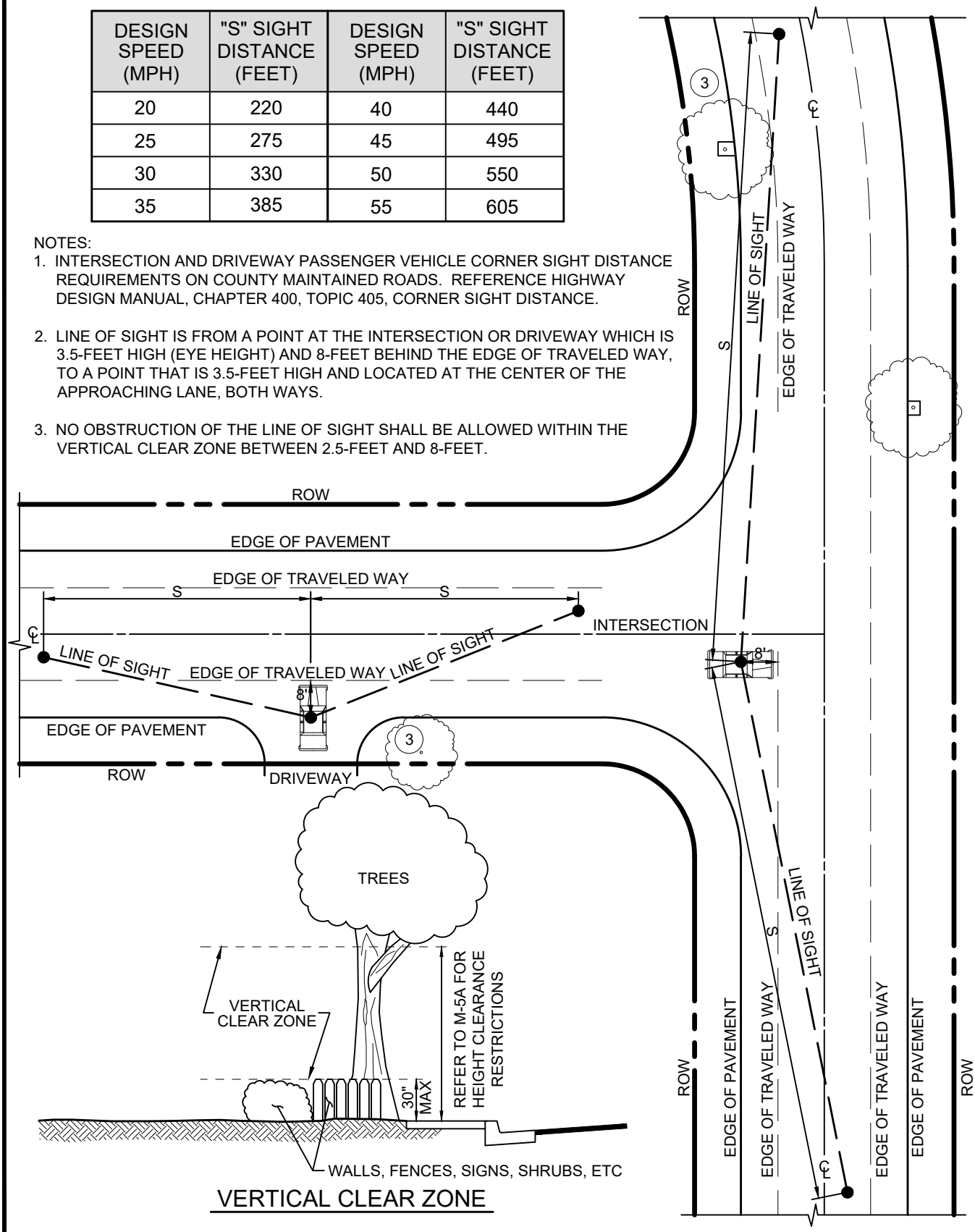

DEPARTMENT OF PUBLIC WORKS - STANDARD DRAWINGS

CORNER SIGHT DISTANCE

INTERSECTIONS & DRIVEWAYS

Issued: August 2022	Scale: 1"=30'
Revised:	Revision No:
Drawing No: A-5a	

DESIGN SPEED (MPH)	"S" SIGHT DISTANCE (FEET)	DESIGN SPEED (MPH)	"S" SIGHT DISTANCE (FEET)
20	125	40	300
25	150	45	360
30	200	50	430
35	250	55	500

NOTES:

1. INTERSECTION AND DRIVEWAY STOPPING SIGHT DISTANCE REQUIREMENTS ON COUNTY MAINTAINED ROADS. REFERENCE HIGHWAY DESIGN MANUAL, CHAPTER 200, TOPIC 201, STOPPING SIGHT DISTANCE.
2. MINIMUM STOPPING SIGHT DISTANCE IS THE DISTANCE REQUIRED BY A MOTORIST TRAVELING AT A GIVEN SPEED TO BRING THE VEHICLE TO A STOP AFTER AN OBJECT ON THE ROAD BECOMES VISIBLE, WHICH IS MEASURED 3.5-FEET HIGH (EYE HEIGHT) TO AN OBJECT 0.5-FEET HIGH ON THE ROAD.
3. NO OBSTRUCTION OF THE LINE OF SIGHT SHALL BE ALLOWED WITHIN THE VERTICAL CLEAR ZONE BETWEEN 2.5-FEET AND 8-FEET.

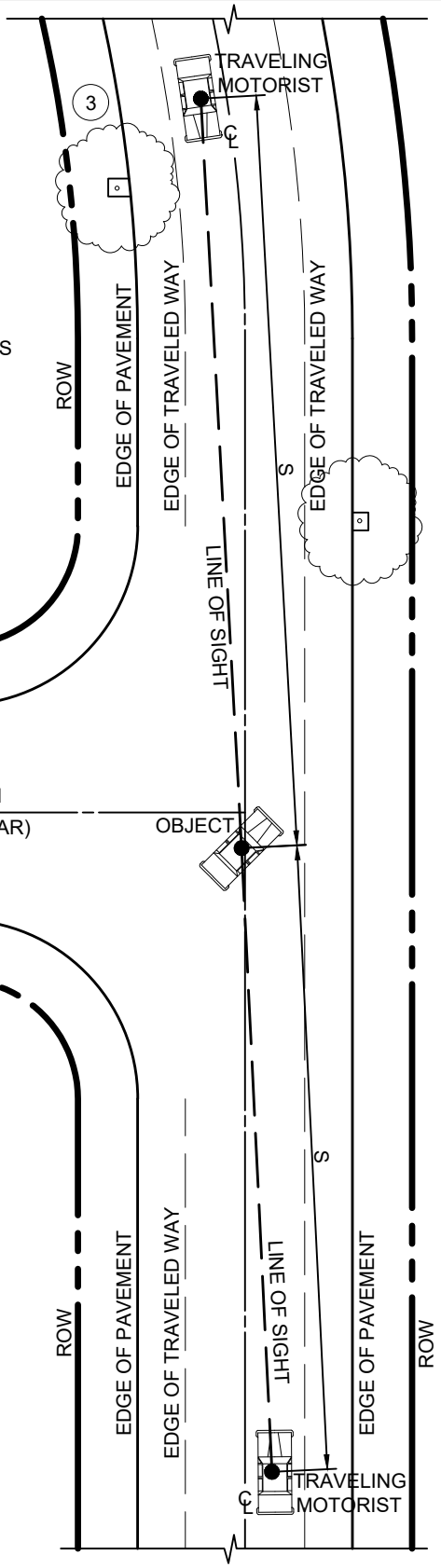

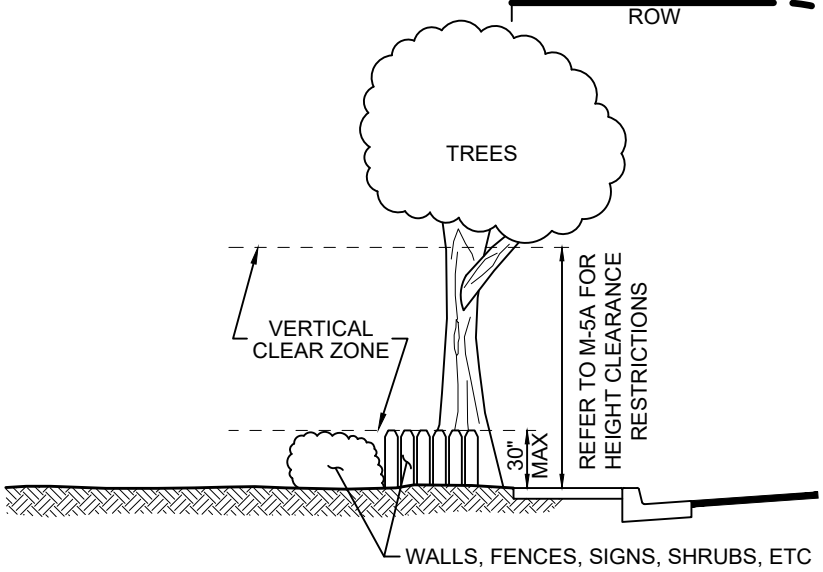

VERTICAL CLEAR ZONE

DEPARTMENT OF PUBLIC WORKS - STANDARD DRAWINGS

STOPPING SIGHT DISTANCE
INTERSECTIONS & DRIVEWAYS

Issued: August 2022	Scale: 1"=30'
Revised:	Revision No:
Drawing No: A-5b	

NOTES:

1. OBSTRUCTIONS WITHIN CONTROLLED AREAS IDENTIFIED BY BELOW SHALL NOT EXCEED THE MAXIMUM CLEARANCES IDENTIFIED HEREON.

TO MINIMIZE VEGETATION SIGHT DISTANCE OBSTRUCTIONS AT ROAD INTERSECTIONS:

2. DETACHED SIDEWALKS ON MINOR ROADS SHALL NOT BE ALLOWED WITHIN THE INTERSECTION CURB RETURN AREA.
3. DETACHED SIDEWALKS ON MAJOR ROADS SHALL NOT BE ALLOWED WITHIN THE SETBACK AS PROVIDED IN TABLE 1.
4. WHEN REQUIRED, ONLY INTEGRAL SIDEWALKS SHALL BE ALLOWED WITHIN THE CURB RETURN AREA, TYPICAL.

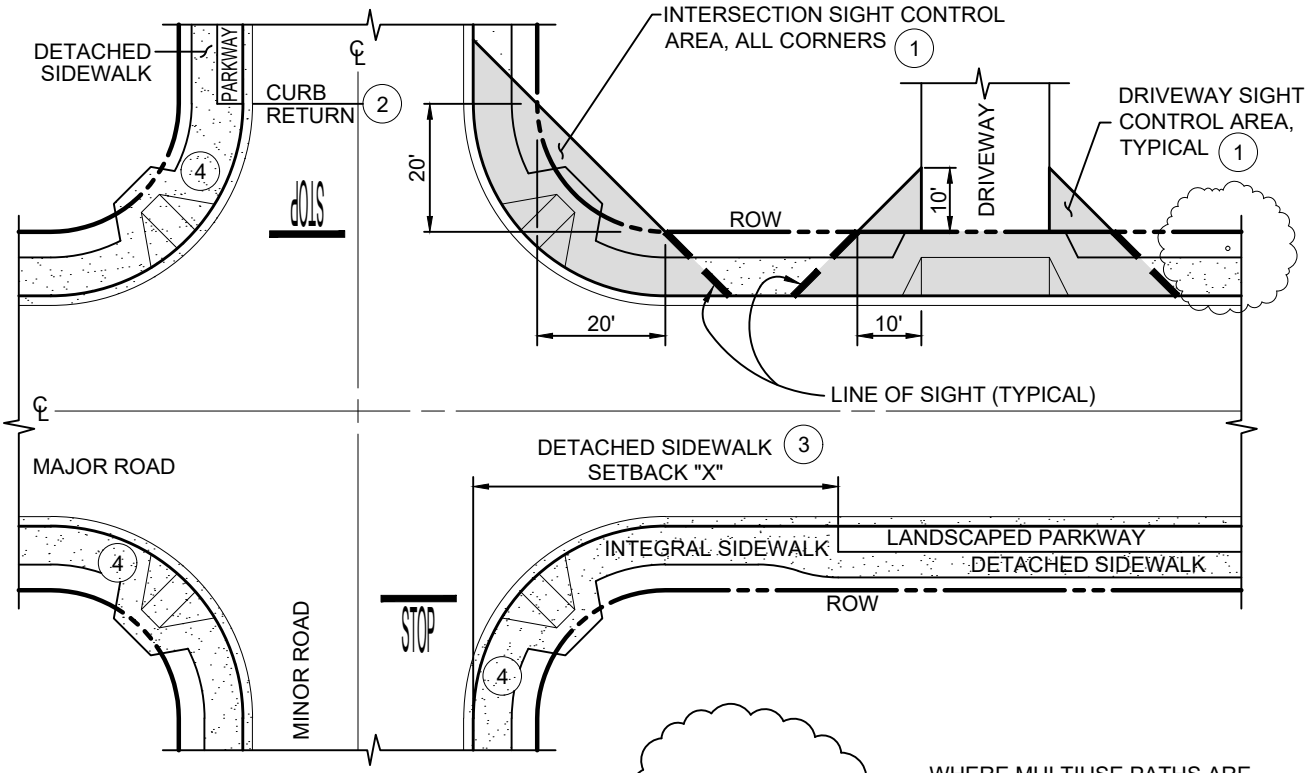

TABLE 1: DETACHED SIDEWALK	
PREVAILING SPEED OF MAJOR ROAD	SETBACK "X"
20 mph	50 ft
25 mph	55 ft
30 mph	75 ft
35 mph	95 ft
40 mph	115 ft
45 mph	135 ft
50 mph	160 ft
55 mph	190 ft

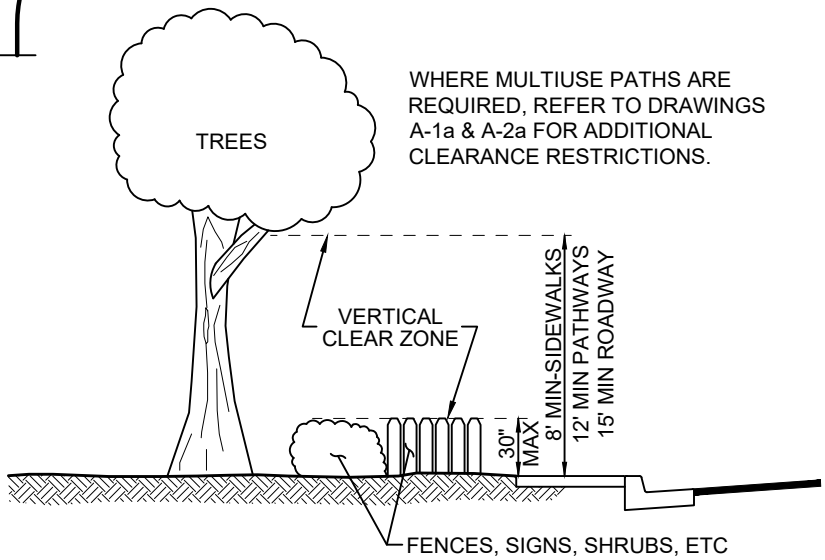

VERTICAL CLEAR ZONE

DEPARTMENT OF PUBLIC WORKS - STANDARD DRAWINGS

SIGHT DISTANCE CLEAR ZONES
URBAN INTERSECTIONS & DRIVEWAYS

Issued: August 2022	Scale: 1"=30'
Revised:	Revision No:
Drawing No: A-5c	

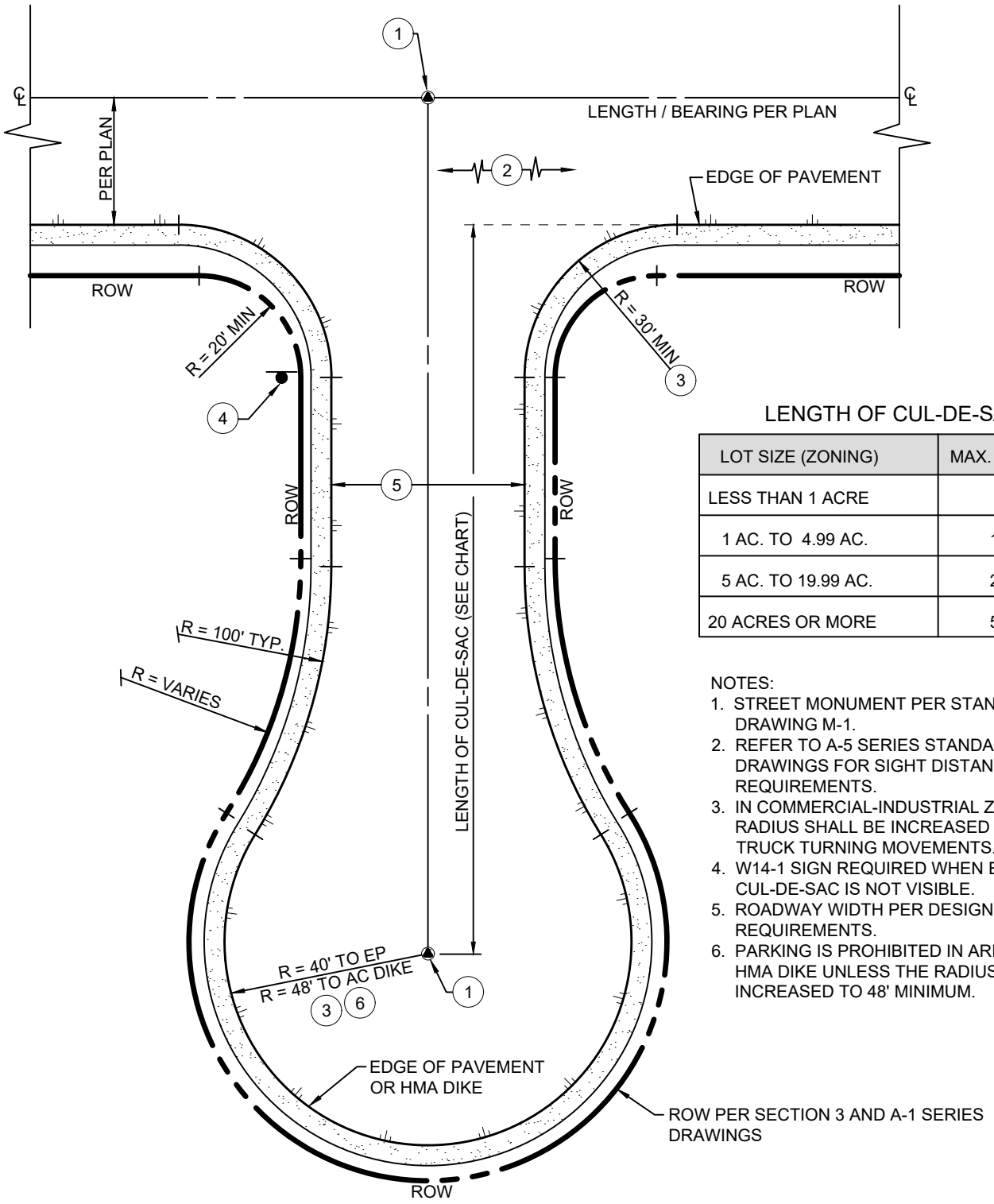

LENGTH OF CUL-DE-SAC

LOT SIZE (ZONING)	MAX. LENGTH
LESS THAN 1 ACRE	800'
1 AC. TO 4.99 AC.	1320'
5 AC. TO 19.99 AC.	2640'
20 ACRES OR MORE	5280'

NOTES:

1. STREET MONUMENT PER STANDARD DRAWING M-1.
2. REFER TO A-5 SERIES STANDARD DRAWINGS FOR SIGHT DISTANCE REQUIREMENTS.
3. IN COMMERCIAL-INDUSTRIAL ZONES THE RADIUS SHALL BE INCREASED TO MEET TRUCK TURNING MOVEMENTS.
4. W14-1 SIGN REQUIRED WHEN END OF CUL-DE-SAC IS NOT VISIBLE.
5. ROADWAY WIDTH PER DESIGN REQUIREMENTS.
6. PARKING IS PROHIBITED IN AREAS WITH HMA DIKE UNLESS THE RADIUS IS INCREASED TO 48' MINIMUM.

DEPARTMENT OF PUBLIC WORKS - STANDARD DRAWINGS

ROAD GEOMETRICS

RURAL CUL-DE-SAC

Issued: August 2022	Scale: 1"=30'
Revised:	Revision No:
Drawing No: A-6	

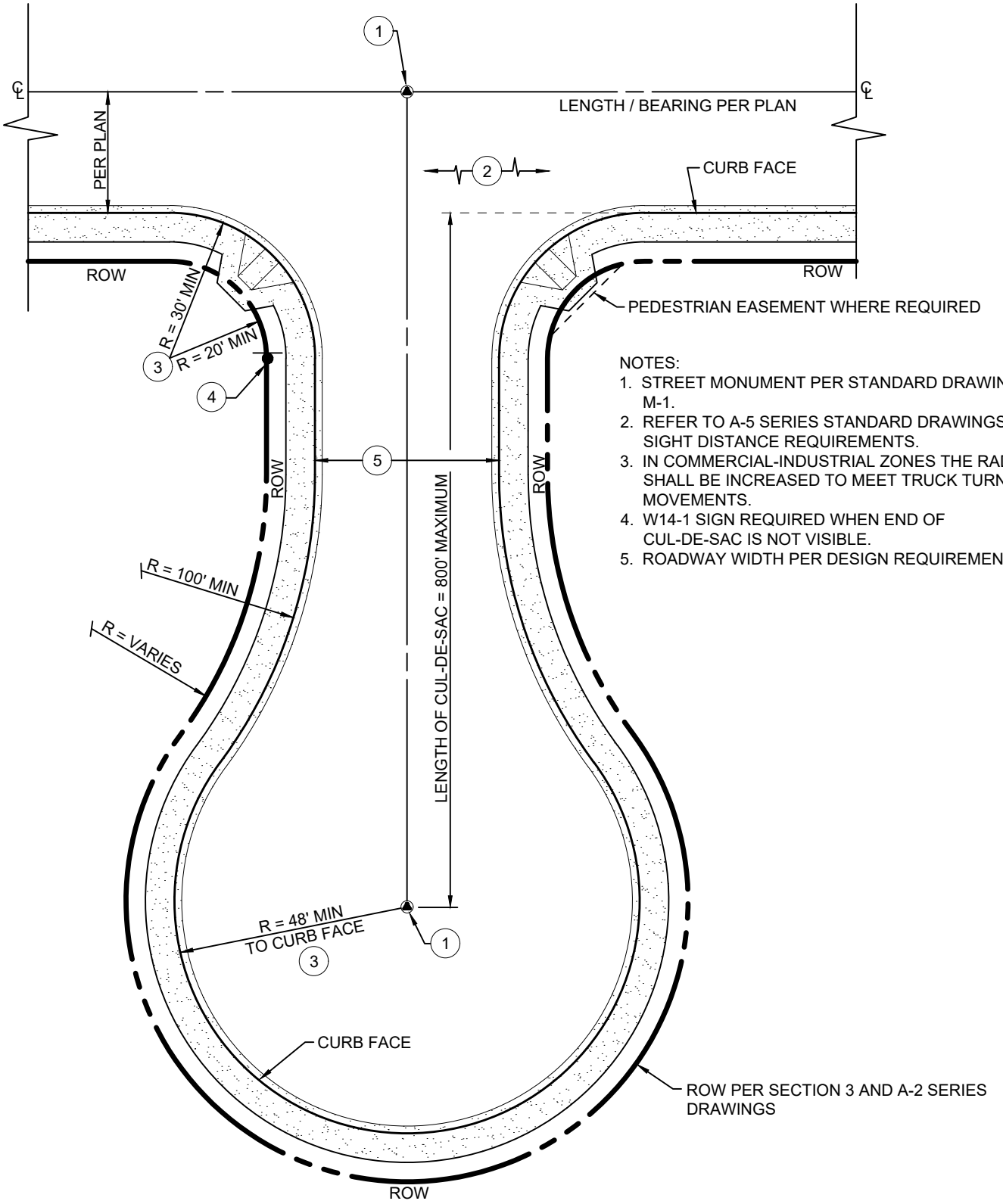

NOTES:

1. STREET MONUMENT PER STANDARD DRAWING M-1.
2. REFER TO A-5 SERIES STANDARD DRAWINGS FOR SIGHT DISTANCE REQUIREMENTS.
3. IN COMMERCIAL-INDUSTRIAL ZONES THE RADIUS SHALL BE INCREASED TO MEET TRUCK TURNING MOVEMENTS.
4. W14-1 SIGN REQUIRED WHEN END OF CUL-DE-SAC IS NOT VISIBLE.
5. ROADWAY WIDTH PER DESIGN REQUIREMENTS.

DEPARTMENT OF PUBLIC WORKS - STANDARD DRAWINGS

STREET GEOMETRICS

URBAN CUL-DE-SAC

Issued:	Scale:
August 2022	1"=30'
Revised:	Revision No:
Drawing No:	A-6a

NOTES:
1. KNUCKLES SHALL ONLY BE ALLOWED IN URBAN AREAS.
2. KNUCKLE USE IS LIMITED TO ADT<500, DESIGN SPEEDS OF 25 MPH OR LESS, AND WITH PRIOR APPROVAL OF THE DEPARTMENT.
3. UNDER NO CIRCUMSTANCES SHALL Δ BE GREATER THAN 90°.
4. IN COMMERCIAL-INDUSTRIAL ZONES, THE DEPARTMENT MAY REQUIRE THAT ALL RADII SHALL BE ADJUSTED BY THE DESIGN ENGINEER TO MEET TRUCK TURNING MOVEMENTS.

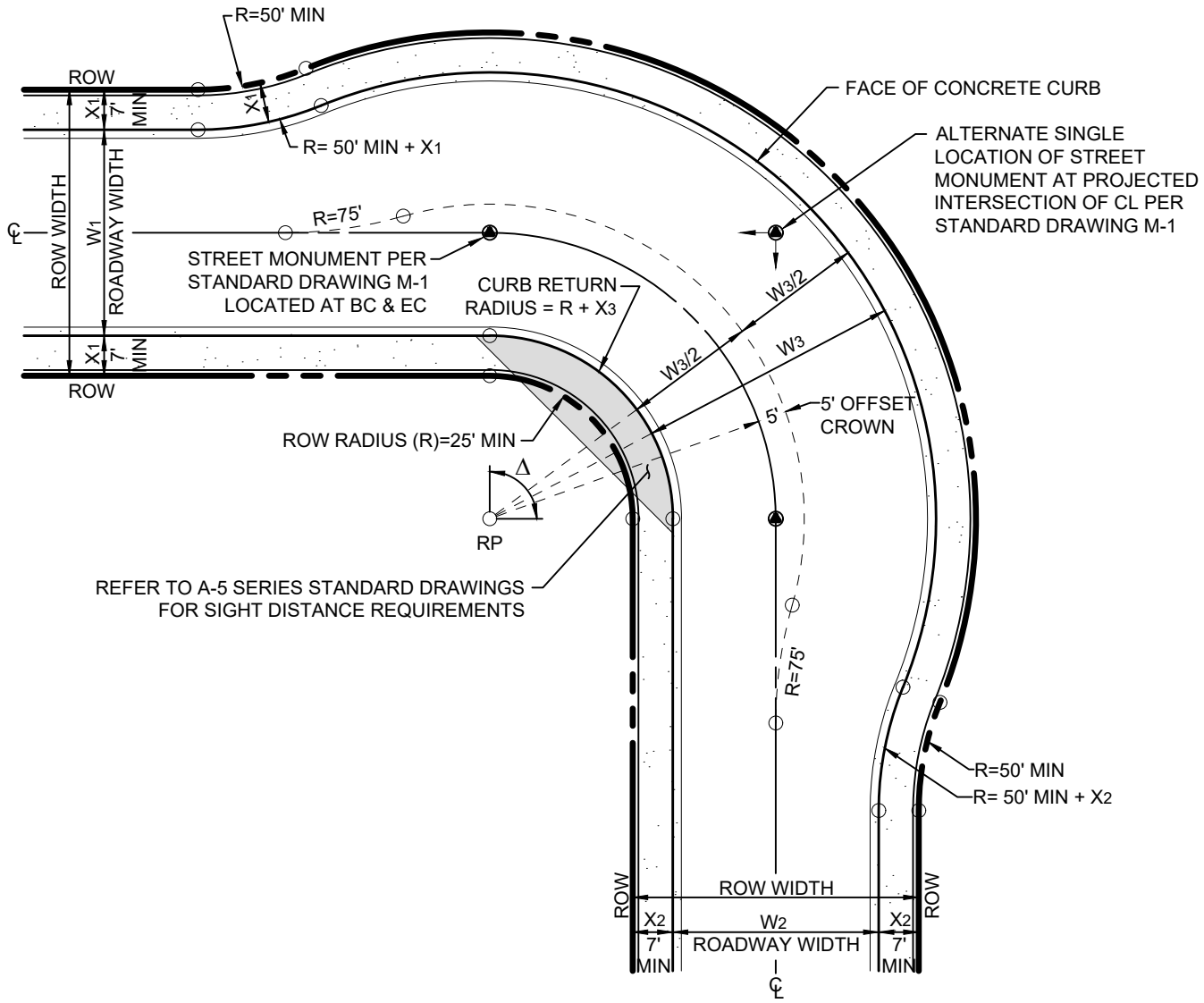

LAYOUT NOTES:
W_3 = THE GREATER OF THE ROAD WIDTHS (W_1 OR W_2) PLUS 10'
X_3 = THE GREATER OF THE WIDTH FROM CURB FACE TO ROW (X_1 OR X_2)

DEPARTMENT OF PUBLIC WORKS - STANDARD DRAWINGS

STREET GEOMETRICS
URBAN KNUCKLE

Issued:	Scale:
August 2022	1"=30'
Revised:	Revision No:
Drawing No:	A-6b

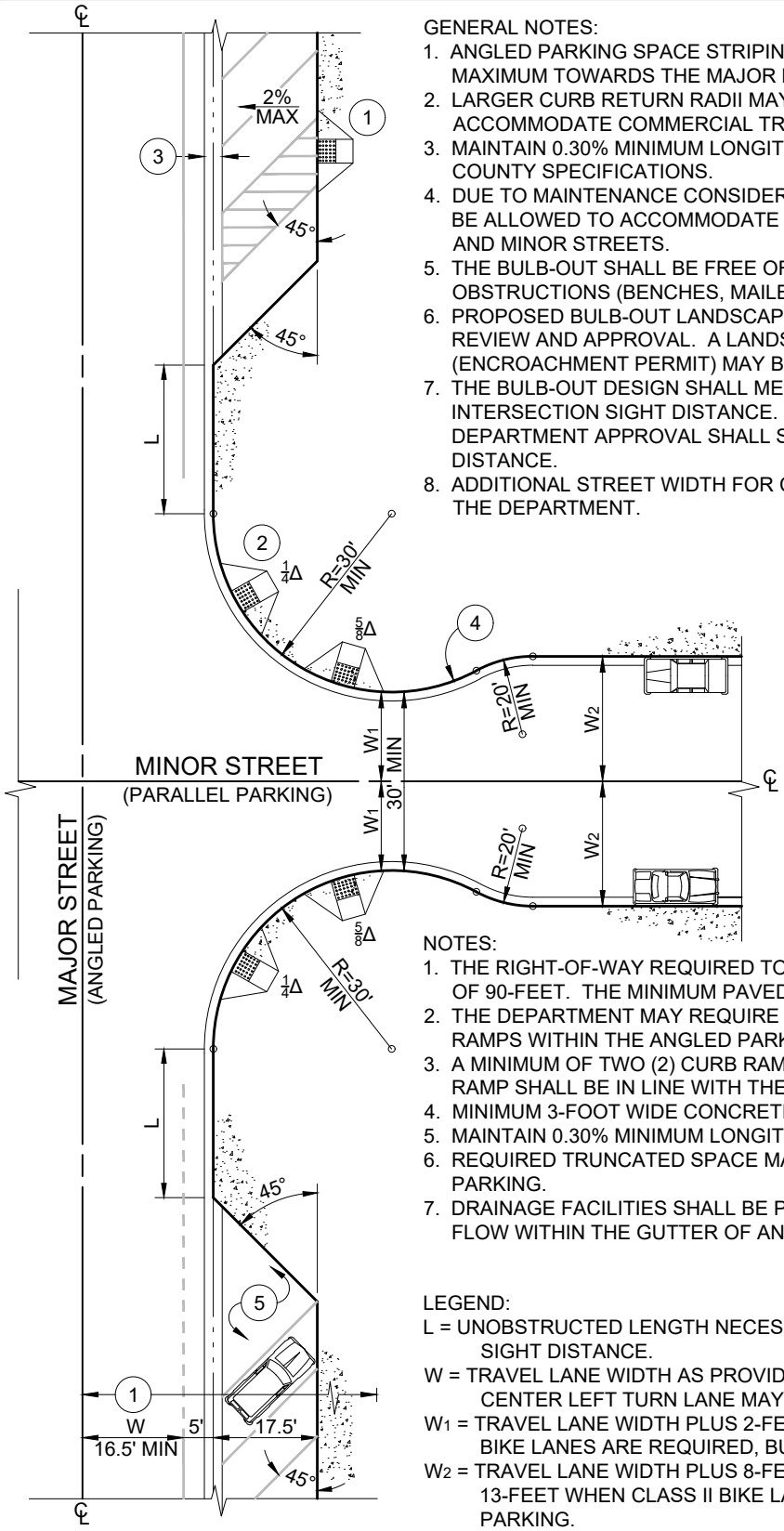

GENERAL NOTES:

1. ANGLED PARKING SPACE STRIPING SHALL BE SET AT 45°, AND SLOPED AT 2% MAXIMUM TOWARDS THE MAJOR ROAD TO ACCOMMODATE FOR DRAINAGE.
2. LARGER CURB RETURN RADII MAY BE REQUIRED BY THE DEPARTMENT TO ACCOMMODATE COMMERCIAL TRUCK MOVEMENTS.
3. MAINTAIN 0.30% MINIMUM LONGITUDINAL CURB AND GUTTER SLOPES PER COUNTY SPECIFICATIONS.
4. DUE TO MAINTENANCE CONSIDERATIONS, SIDEWALK UNDER DRAINS SHALL NOT BE ALLOWED TO ACCOMMODATE FOR BULB-OUT DRAINAGE BETWEEN MAJOR AND MINOR STREETS.
5. THE BULB-OUT SHALL BE FREE OF ALL PEDESTRIAN AND SIGHT DISTANCE OBSTRUCTIONS (BENCHES, MAILBOXES, UTILITY SERVICE CABINETS, ETC)
6. PROPOSED BULB-OUT LANDSCAPING SHALL BE SUBJECT TO DEPARTMENT REVIEW AND APPROVAL. A LANDSCAPING MAINTENANCE AGREEMENT (ENCROACHMENT PERMIT) MAY BE REQUIRED.
7. THE BULB-OUT DESIGN SHALL MEET COUNTY REQUIREMENTS FOR INTERSECTION SIGHT DISTANCE. THE CONSTRUCTION PLANS SUBMITTED FOR DEPARTMENT APPROVAL SHALL SHOW AND LABEL THE PROPOSED SIGHT DISTANCE.
8. ADDITIONAL STREET WIDTH FOR CLASS II BIKE LANES MAY BE REQUIRED BY THE DEPARTMENT.

NOTES:

1. THE RIGHT-OF-WAY REQUIRED TO PROVIDE ANGLED PARKING SHALL BE A MINIMUM OF 90-FEET. THE MINIMUM PAVED WIDTH SHALL BE 39-FEET FROM CENTERLINE.
2. THE DEPARTMENT MAY REQUIRE "PUBLIC" ADA ACCESSIBLE PARKING SPACES AND RAMPS WITHIN THE ANGLED PARKING AREA.
3. A MINIMUM OF TWO (2) CURB RAMPS SHALL BE INSTALLED IN EACH BULB-OUT. EACH RAMP SHALL BE IN LINE WITH THE SIDEWALK.
4. MINIMUM 3-FOOT WIDE CONCRETE RIBBON GUTTER SIMILAR TO STANDARD D-5.
5. MAINTAIN 0.30% MINIMUM LONGITUDINAL TOP OF CURB GRADES.
6. REQUIRED TRUNCATED SPACE MAY BE SIGNED AND STRIPED FOR MOTORCYCLE PARKING.
7. DRAINAGE FACILITIES SHALL BE PROVIDED SO THAT NO MORE THAN 0.3 cfs SHALL FLOW WITHIN THE GUTTER OF AN INTERSECTION CURB RETURN.

LEGEND:

L = UNOBSTRUCTED LENGTH NECESSARY TO ACCOMMODATE FOR INTERSECTION SIGHT DISTANCE.

W = TRAVEL LANE WIDTH AS PROVIDED BY DEPARTMENT (ADDITIONAL WIDTH FOR A CENTER LEFT TURN LANE MAY BE REQUIRED).

W_1 = TRAVEL LANE WIDTH PLUS 2-FEET, OR LANE WIDTH PLUS 5-FEET WHEN CLASS II BIKE LANES ARE REQUIRED, BUT SHALL NOT BE LESS THAN 15-FEET.

W_2 = TRAVEL LANE WIDTH PLUS 8-FEET FOR PARALLEL PARKING, OR LANE WIDTH PLUS 13-FEET WHEN CLASS II BIKE LANES ARE REQUIRED ADJACENT TO PARALLEL PARKING.

DEPARTMENT OF PUBLIC WORKS - STANDARD DRAWINGS

STREET GEOMETRICS

URBAN BULBOUT, ANGLED PARKING

Issued:	Scale:
August 2022	1"=30'
Revised:	Revision No:
Drawing No:	A-6c

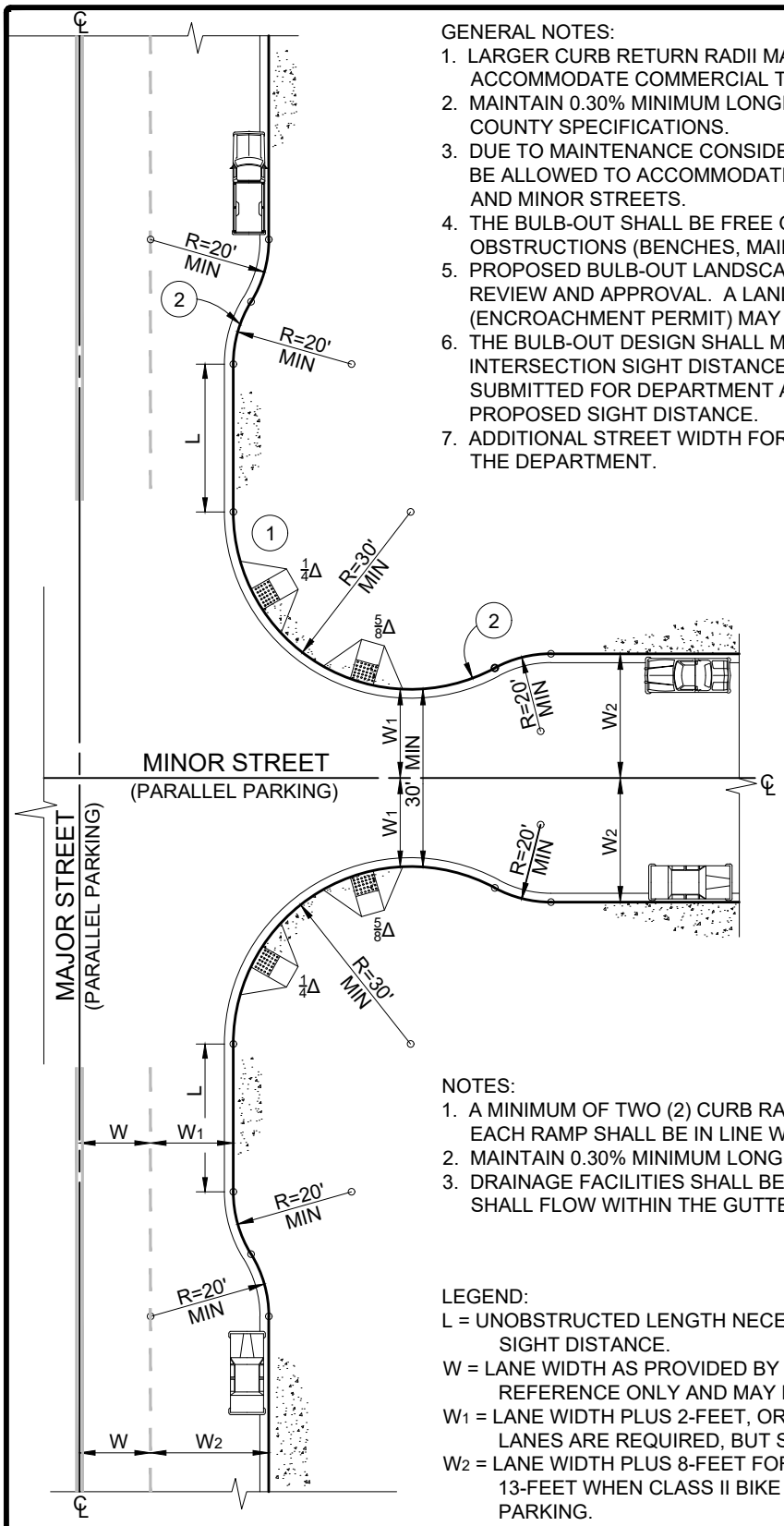

GENERAL NOTES:

1. LARGER CURB RETURN RADII MAY BE REQUIRED BY THE DEPARTMENT TO ACCOMMODATE COMMERCIAL TRUCK MOVEMENTS.
2. MAINTAIN 0.30% MINIMUM LONGITUDINAL CURB AND GUTTER SLOPES PER COUNTY SPECIFICATIONS.
3. DUE TO MAINTENANCE CONSIDERATIONS, SIDEWALK UNDER DRAINS SHALL NOT BE ALLOWED TO ACCOMMODATE FOR BULB-OUT DRAINAGE BETWEEN MAJOR AND MINOR STREETS.
4. THE BULB-OUT SHALL BE FREE OF ALL PEDESTRIAN AND SIGHT DISTANCE OBSTRUCTIONS (BENCHES, MAILBOXES, UTILITY SERVICE CABINETS, ETC)
5. PROPOSED BULB-OUT LANDSCAPING SHALL BE SUBJECT TO DEPARTMENT REVIEW AND APPROVAL. A LANDSCAPING MAINTENANCE AGREEMENT (ENCROACHMENT PERMIT) MAY BE REQUIRED.
6. THE BULB-OUT DESIGN SHALL MEET COUNTY REQUIREMENTS FOR INTERSECTION SIGHT DISTANCE. THE CONSTRUCTION PLANS SHALL SUBMITTED FOR DEPARTMENT APPROVAL SHALL SHOW AND LABEL THE PROPOSED SIGHT DISTANCE.
7. ADDITIONAL STREET WIDTH FOR CLASS II BIKE LANES MAY BE REQUIRED BY THE DEPARTMENT.

NOTES:

1. A MINIMUM OF TWO (2) CURB RAMPS SHALL BE INSTALLED IN EACH BULB-OUT. EACH RAMP SHALL BE IN LINE WITH THE SIDEWALK.
2. MAINTAIN 0.30% MINIMUM LONGITUDINAL TOP OF CURB GRADES.
3. DRAINAGE FACILITIES SHALL BE PROVIDED SO THAT NO MORE THAN 0.3 cfs SHALL FLOW WITHIN THE GUTTER OF AN INTERSECTION CURB RETURN.

LEGEND:

L = UNOBSTRUCTED LENGTH NECESSARY TO ACCOMMODATE FOR INTERSECTION SIGHT DISTANCE.

W = LANE WIDTH AS PROVIDED BY DEPARTMENT (TWO LANES ARE SHOWN FOR REFERENCE ONLY AND MAY NOT BE REQUIRED BY DEPARTMENT).

W_1 = LANE WIDTH PLUS 2-FEET, OR LANE WIDTH PLUS 5-FEET WHEN CLASS II BIKE LANES ARE REQUIRED, BUT SHALL NOT BE LESS THAN 15-FEET.

W_2 = LANE WIDTH PLUS 8-FEET FOR PARALLEL PARKING, OR LANE WIDTH PLUS 13-FEET WHEN CLASS II BIKE LANES ARE REQUIRED ADJACENT TO PARALLEL PARKING.

DEPARTMENT OF PUBLIC WORKS - STANDARD DRAWINGS

STREET GEOMETRICS

URBAN BULBOUT, PARALLEL PARKING

Issued:	Scale:
August 2022	1"=30'
Revised:	Revision No:
Drawing No:	A-6d

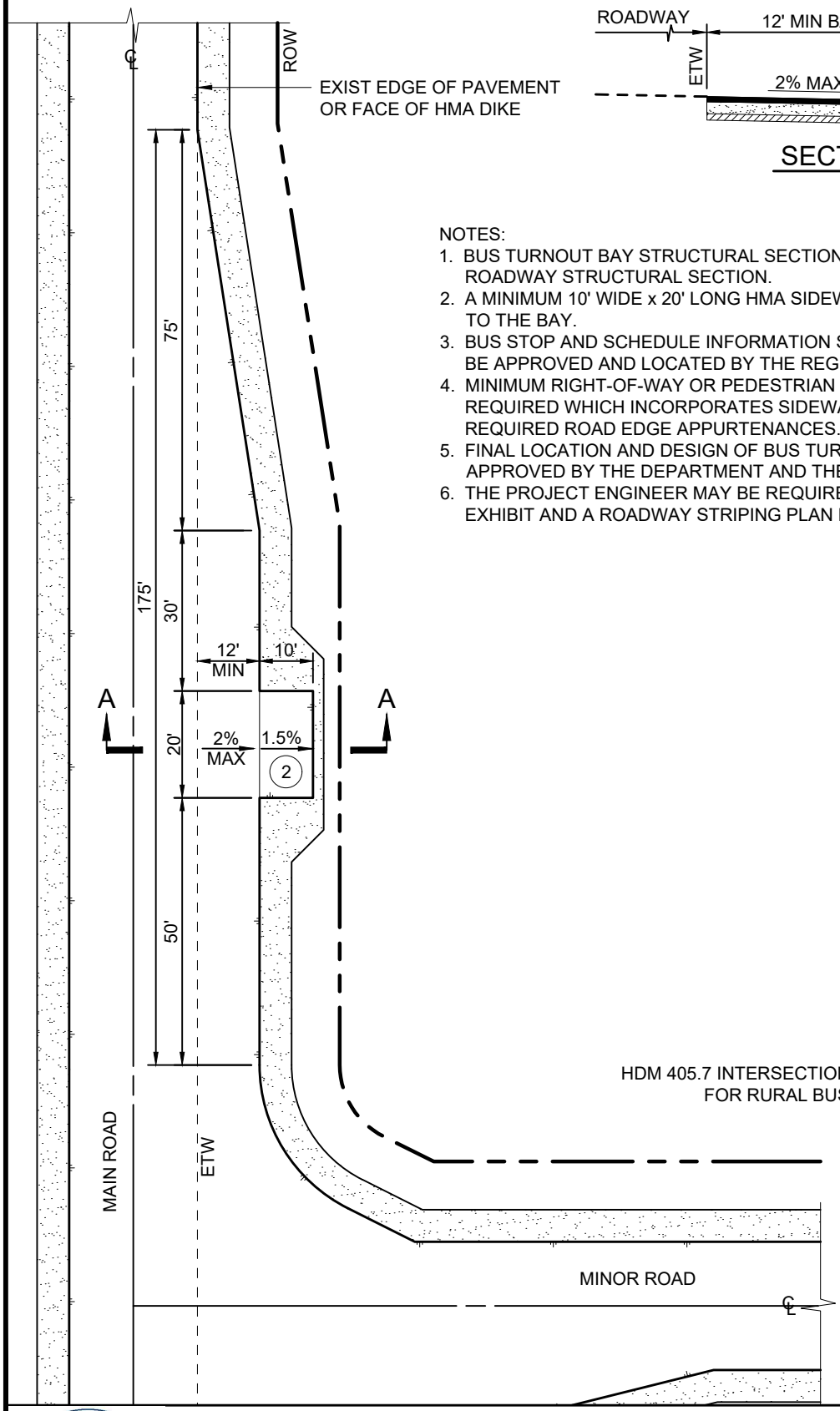

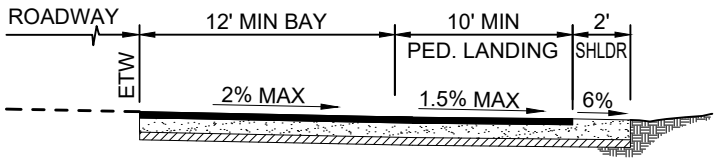

SECTION A-A
NTS

NOTES:
1. BUS TURNOUT BAY STRUCTURAL SECTION SHALL MATCH NEW OR EXISTING ROADWAY STRUCTURAL SECTION.
2. A MINIMUM 10' WIDE x 20' LONG HMA SIDEWALK SHALL BE REQUIRED ADJACENT TO THE BAY.
3. BUS STOP AND SCHEDULE INFORMATION SIGN(S) MAY BE REQUIRED AND SHALL BE APPROVED AND LOCATED BY THE REGIONAL TRANSIT AUTHORITY (RTA).
4. MINIMUM RIGHT-OF-WAY OR PEDESTRIAN ACCESS EASEMENT SHALL BE REQUIRED WHICH INCORPORATES SIDEWALKS, SHELTERS, AND OTHER REQUIRED ROAD EDGE APPURTENANCES.
5. FINAL LOCATION AND DESIGN OF BUS TURNOUT AND LOADING AREA SHALL BE APPROVED BY THE DEPARTMENT AND THE RTA.
6. THE PROJECT ENGINEER MAY BE REQUIRED TO PROVIDE A SIGHT DISTANCE EXHIBIT AND A ROADWAY STRIPING PLAN FOR DEPARTMENT APPROVAL.

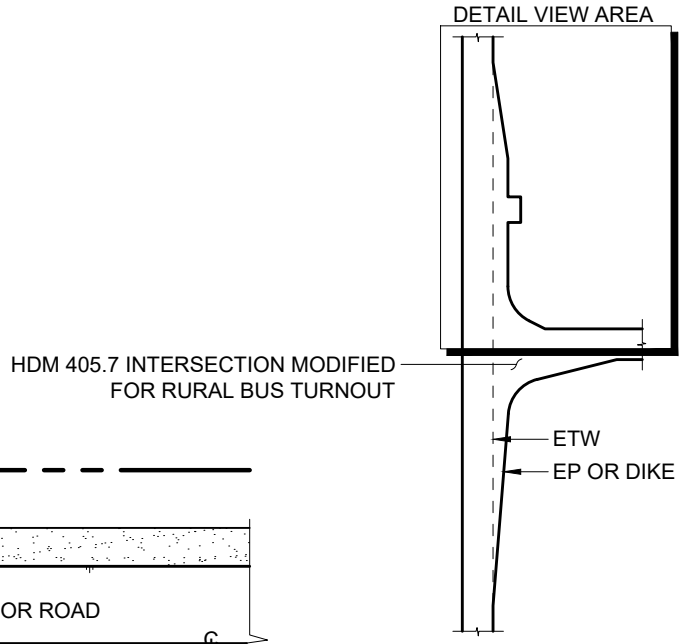

OVERALL VIEW
NTS

DEPARTMENT OF PUBLIC WORKS - STANDARD DRAWINGS

ROAD GEOMETRICS
RURAL BUS TURNOUT

Issued: August 2022	Scale: 1"=30'
Revised:	Revision No:
Drawing No: A-6e	

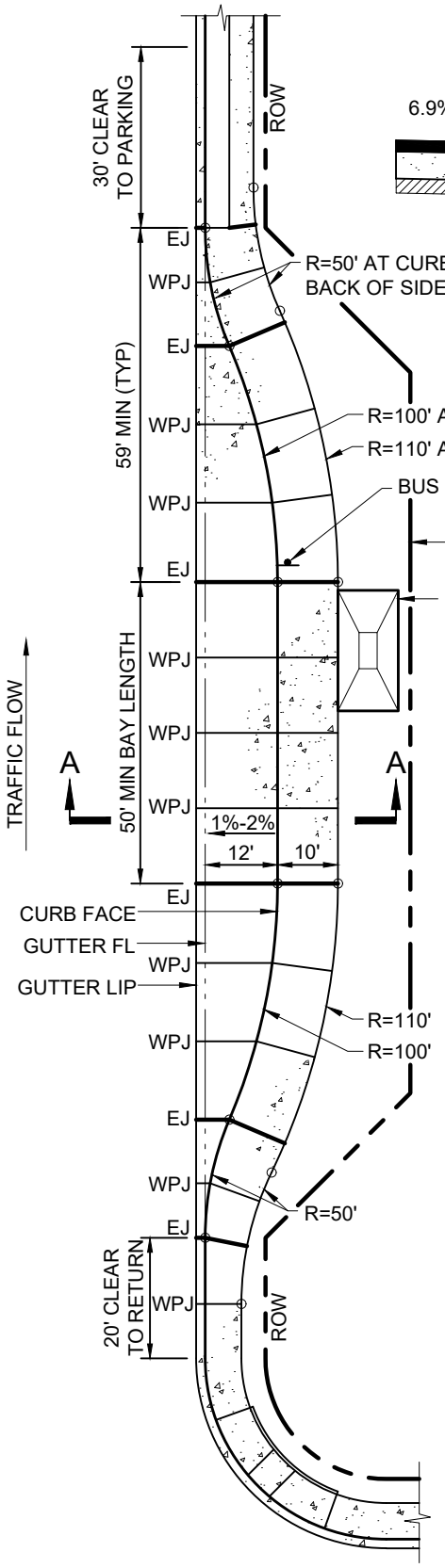

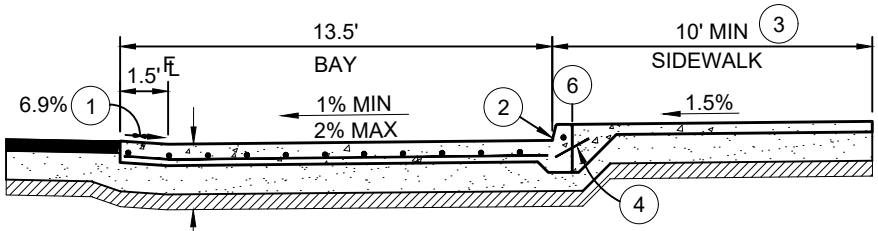

8" MINIMUM PCC WITH #4's AT 24" ON CENTER, EACH WAY, OVER CLASS II AGGREGATE BASE TO 95% RELATIVE COMPACTION, OVER 12" MINIMUM SUBGRADE TO 95% RELATIVE COMPACTION. ACTUAL STRUCTURAL SECTION SHALL BE DETERMINED AT THE TIME OF CONSTRUCTION BASED ON THE SUBGRADE R-VALUE.

SECTION A-A

NOTES:

1. GUTTER SLOPE AT FLOWLINE (FL) SHALL BE PER STANDARD DRAWING C-2 (1-1/4" IN 18", 6.9%).
2. 6" TALL MAX TYPE "C" CURB PER STANDARD DRAWING C-3 SHALL BE MONOLITHICALLY POURED WITH THE BAY.
3. A MINIMUM 10' WIDE SIDEWALK PER DRAWING C-4 SHALL BE REQUIRED ADJACENT TO THE BAY. APPROACH SIDEWALK WIDTH AND TYPE DETERMINED BY THE DESIGN STANDARDS.
4. SIDEWALK SHALL BE DOWELED INTO CURB PER STANDARD DRAWING C-4, OPTIONAL JOINT DETAIL.
5. BUS STOP LOCATION AND SCHEDULE INFORMATION SIGN(S) TO BE APPROVED AND LOCATED BY THE REGIONAL TRANSIT AUTHORITY (RTA).
6. MINIMUM RIGHT-OF-WAY SHALL BE LOCATED AT BACK OF CURB FACE WITH A PEDESTRIAN ACCESS EASEMENT PROVIDED TO INCORPORATE SIDEWALK, SHELTERS, AND OTHER REQUIRED APPURTENANCES.
7. PROVIDE EXPANSION JOINTS (EJ) AND WEAKENED PLANE JOINTS (WPJ) AS SHOWN AND PER STANDARD DRAWING C-1.
8. FINAL LOCATION AND DESIGN OF BUS TURNOUT AND LOADING AREA SHALL BE APPROVED BY THE DEPARTMENT AND THE RTA. STANDARD IS FOR HIGH-SPEED AND HIGH-VOLUME STREETS.
9. THE PROJECT ENGINEER MAY BE REQUIRED TO PROVIDE A SIGHT DISTANCE EXHIBIT FOR DEPARTMENT APPROVAL.
10. FOR RURAL BUS STOPS ASPHALT WIDENING SHALL BE REQUIRED. CONTACT PUBLIC WORKS FOR ADDITIONAL REQUIREMENTS.

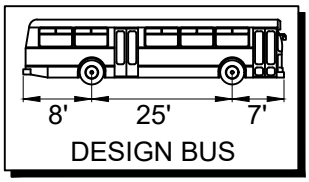

DEPARTMENT OF PUBLIC WORKS - STANDARD DRAWINGS

STREET GEOMETRICS
URBAN BUS TURNOUT

Issued: August 2022	Scale: 1"=30'
Revised:	Revision No:
Drawing No: A-6f	

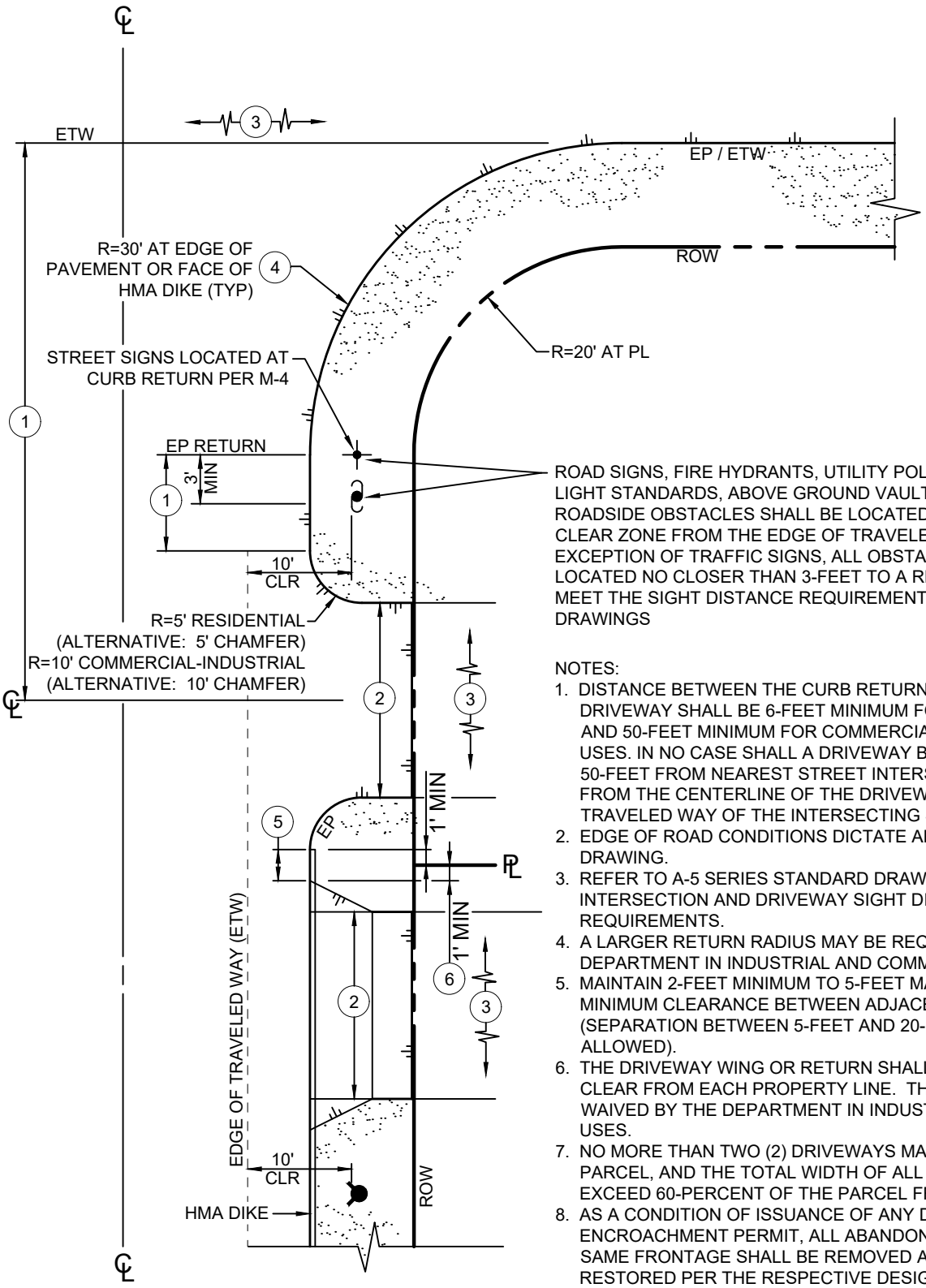

ROAD SIGNS, FIRE HYDRANTS, UTILITY POLES, TRAFFIC SIGNALS, LIGHT STANDARDS, ABOVE GROUND VAULTS, AND ALL OTHER ROADSIDE OBSTACLES SHALL BE LOCATED TO PROVIDE A 10-FEET CLEAR ZONE FROM THE EDGE OF TRAVELED WAY, AND WITH THE EXCEPTION OF TRAFFIC SIGNS, ALL OBSTACLES SHALL BE LOCATED NO CLOSER THAN 3-FEET TO A RETURN AND SHALL MEET THE SIGHT DISTANCE REQUIREMENTS OF THE A-5 SERIES DRAWINGS

NOTES:

1. DISTANCE BETWEEN THE CURB RETURN AND THE FIRST DRIVEWAY SHALL BE 6-FEET MINIMUM FOR RURAL RESIDENTIAL, AND 50-FEET MINIMUM FOR COMMERCIAL AND INDUSTRIAL USES. IN NO CASE SHALL A DRIVEWAY BE CLOSER THAN 50-FEET FROM NEAREST STREET INTERSECTION AS MEASURED FROM THE CENTERLINE OF THE DRIVEWAY TO THE NEAREST TRAVELED WAY OF THE INTERSECTING STREET.
2. EDGE OF ROAD CONDITIONS DICTATE APPLICABLE B-1 SERIES DRAWING.
3. REFER TO A-5 SERIES STANDARD DRAWINGS FOR INTERSECTION AND DRIVEWAY SIGHT DISTANCE REQUIREMENTS.
4. A LARGER RETURN RADIUS MAY BE REQUIRED BY THE DEPARTMENT IN INDUSTRIAL AND COMMERCIAL USES.
5. MAINTAIN 2-FEET MINIMUM TO 5-FEET MAXIMUM, OR 20-FEET MINIMUM CLEARANCE BETWEEN ADJACENT DRIVEWAYS (SEPARATION BETWEEN 5-FEET AND 20-FEET ARE NOT ALLOWED).
6. THE DRIVEWAY WING OR RETURN SHALL BE 1-FOOT MINIMUM CLEAR FROM EACH PROPERTY LINE. THIS STANDARD MAY BE WAIVED BY THE DEPARTMENT IN INDUSTRIAL AND COMMERCIAL USES.
7. NO MORE THAN TWO (2) DRIVEWAYS MAY SERVE A SINGLE PARCEL, AND THE TOTAL WIDTH OF ALL DRIVEWAYS SHALL NOT EXCEED 60-PERCENT OF THE PARCEL FRONTAGE.
8. AS A CONDITION OF ISSUANCE OF ANY DRIVEWAY ENCROACHMENT PERMIT, ALL ABANDONED DRIVEWAYS ON THE SAME FRONTAGE SHALL BE REMOVED AND THE SHOULDER RESTORED PER THE RESPECTIVE DESIGN STANDARDS.

DEPARTMENT OF PUBLIC WORKS - STANDARD DRAWINGS

RURAL DRIVEWAY
LAYOUT STANDARDS

Issued:	Scale:
August 2022	NTS
Revised:	Revision No:
Drawing No:	B-1

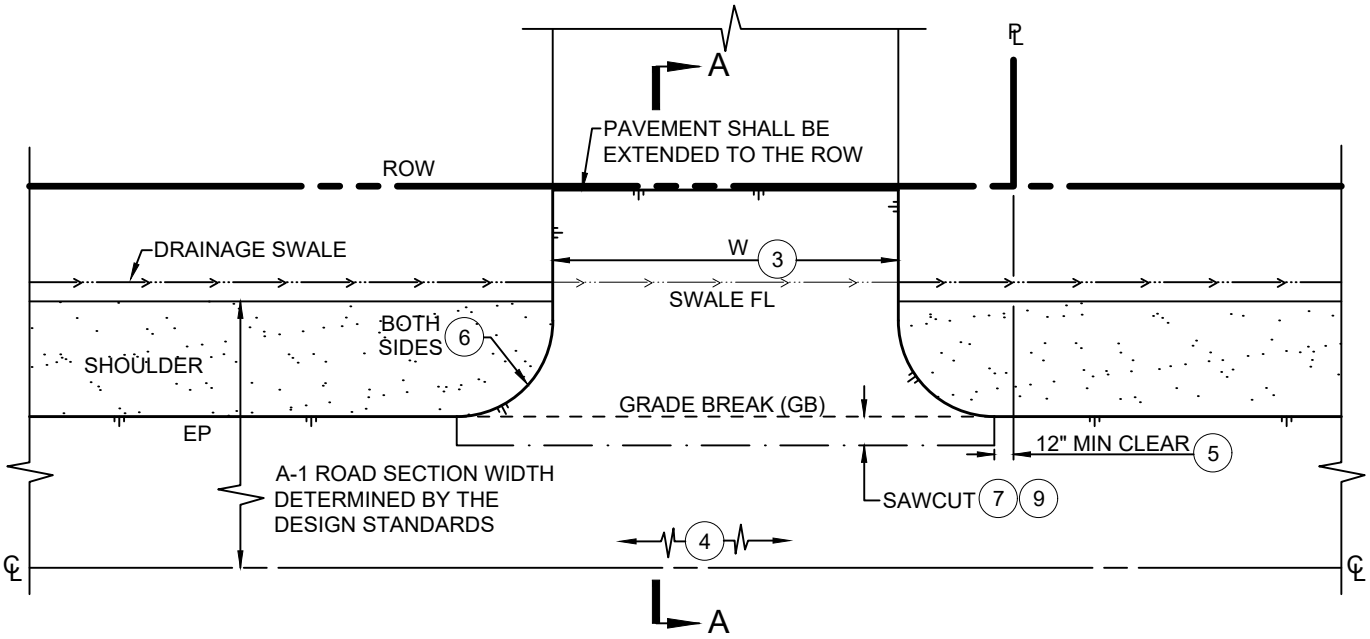

PLAN VIEW

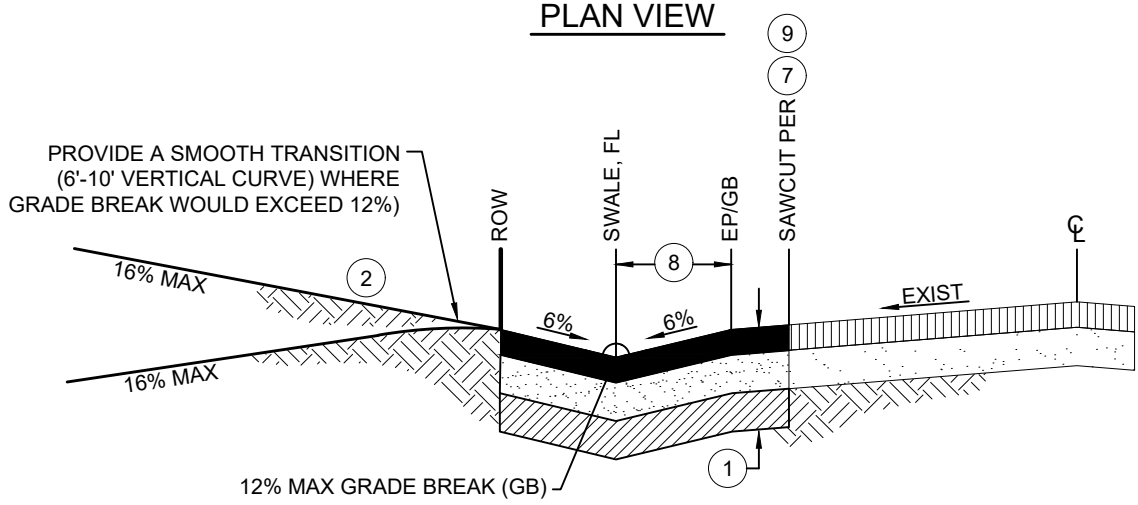

SECTION A-A

NOTES:

1. WITHIN THE PUBLIC RIGHT-OF-WAY, THE DRIVEWAY SECTION SHALL MATCH THE APPROVED ROAD SECTION OR SHALL MATCH THE EXISTING ROAD SECTION AND SHALL MEET THE FOLLOWING REQUIREMENTS:
   - HOT MIX ASPHALT (HMA) PER THE DESIGN STANDARDS TO 95% RELATIVE COMPACTION, OVER
   - CLASS II AGGREGATE BASE TO 95% RELATIVE COMPACTION, OVER
   - 12" MINIMUM SUBGRADE TO 95% RELATIVE COMPACTION
2. OUTSIDE THE PUBLIC RIGHT-OF-WAY, THE DRIVEWAY STRUCTURAL SECTION SHALL BE DETERMINED BY THE PROJECT DESIGNER AND SHALL BE IN COMPLIANCE WITH CDF/FIRE REGULATIONS.
3. RESIDENTIAL DRIVEWAY WIDTH SHALL BE 10-FEET MINIMUM TO 20-FEET MAXIMUM, COMMERCIAL-INDUSTRIAL DRIVEWAY WIDTH SHALL BE 12-FEET MINIMUM TO 35-FEET MAXIMUM. ALL DRIVEWAYS SHALL MEET FIRE AGENCY REGULATIONS.
4. REFER TO A-5 SERIES STANDARD DRAWINGS FOR DRIVEWAY SIGHT DISTANCE REQUIREMENTS.
5. THE END OF DRIVEWAY RETURN SHALL BE 1-FOOT MINIMUM CLEAR FROM THE PROPERTY LINE.
6. THE DRIVEWAY RETURN SHALL HAVE A RADIUS OF 5-FEET FOR RESIDENTIAL (ALTERNATIVE: 5-FEET CHAMFER), AND A RADIUS OF 10-FEET FOR COMMERCIAL-INDUSTRIAL (ALTERNATIVE: 10-FEET CHAMFER).
7. FOR NEW DRIVEWAY CONSTRUCTION AGAINST EXISTING ROADWAY, SAWCUT TO REMOVE EXISTING ROADWAY AND RECONSTRUCT PER DRAWINGS R-1 AND R-2.
8. DISTANCE TO MATCH ROADSIDE DRAINAGE SWALE PER SERIES A-1 DRAWING REQUIREMENTS.
9. AFTER PAVING, APPLY SS1H OIL (OR APPROVED EQUAL) TO ALL SURFACE SEAMS.

DEPARTMENT OF PUBLIC WORKS - STANDARD DRAWINGS

RURAL DRIVEWAY
FOR EDGE OF PAVEMENT (NO DIKE)

Issued: August 2022	Scale: 1"=10'
Revised:	Revision No:
Drawing No: B-1a	

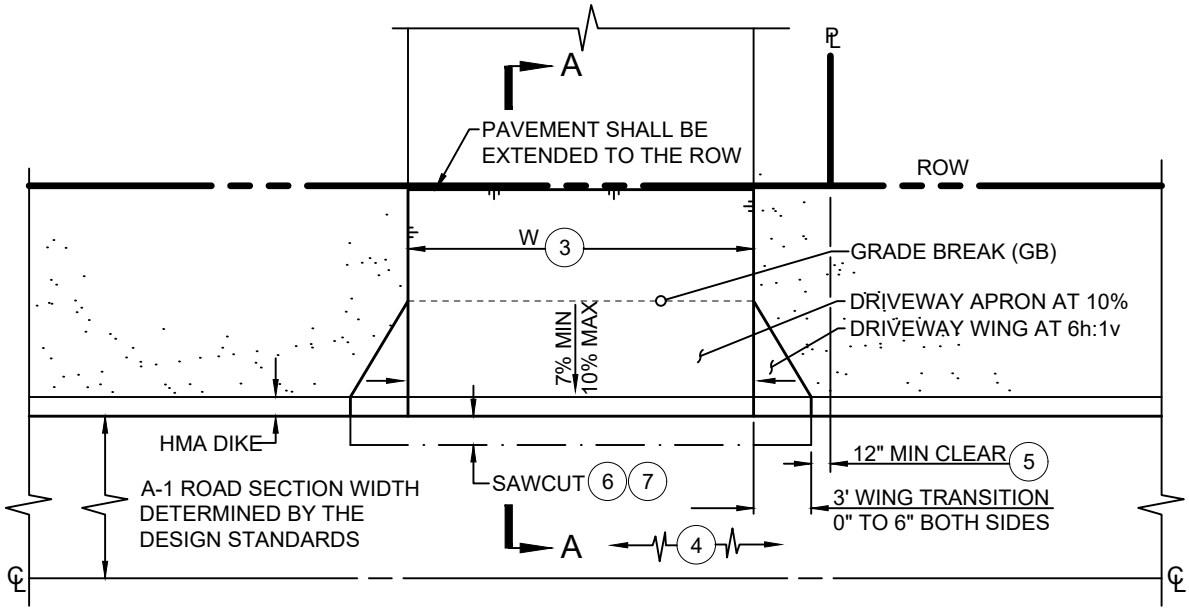

PLAN VIEW

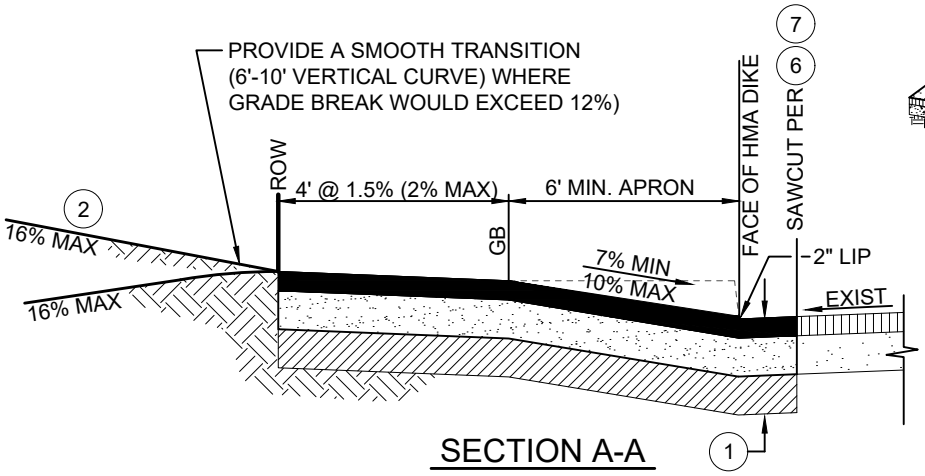

SECTION A-A

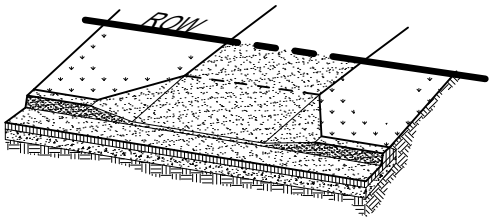

PERSPECTIVE VIEW
NO SCALE

NOTES:

1. WITHIN THE PUBLIC RIGHT-OF-WAY, THE DRIVEWAY SECTION SHALL MATCH THE APPROVED ROAD SECTION OR SHALL MATCH THE EXISTING ROAD SECTION AND SHALL MEET THE FOLLOWING REQUIREMENTS:
   - HOT MIX ASPHALT (HMA) PER THE DESIGN STANDARDS TO 95% RELATIVE COMPACTION, OVER
   - CLASS II AGGREGATE BASE TO 95% RELATIVE COMPACTION, OVER
   - 12" MINIMUM SUBGRADE TO 95% RELATIVE COMPACTION
2. OUTSIDE THE PUBLIC RIGHT-OF-WAY, THE DRIVEWAY STRUCTURAL SECTION SHALL BE DETERMINED BY THE PROJECT DESIGNER AND SHALL BE IN COMPLIANCE WITH CDF/FIRE REGULATIONS.
3. RESIDENTIAL DRIVEWAY WIDTH SHALL BE 10-FEET MINIMUM TO 20-FEET MAXIMUM, COMMERCIAL-INDUSTRIAL DRIVEWAY WIDTH SHALL BE 12-FEET MINIMUM TO 35-FEET MAXIMUM. ALL DRIVEWAYS SHALL MEET FIRE AGENCY REGULATIONS.
4. REFER TO A-5 SERIES STANDARD DRAWINGS FOR DRIVEWAY SIGHT DISTANCE REQUIREMENTS.
5. THE DRIVEWAY WING SHALL BE 1-FOOT MINIMUM CLEAR FROM THE PROPERTY LINE.
6. FOR NEW DRIVEWAY CONSTRUCTION AGAINST EXISTING ROADWAY, SAWCUT TO REMOVE EXISTING ROADWAY AND RECONSTRUCT PER STANDARD DRAWINGS R-1 AND R-2.
7. AFTER PAVING, APPLY SS1H OIL (OR APPROVED EQUAL) TO ALL SURFACE SEAMS.

DEPARTMENT OF PUBLIC WORKS - STANDARD DRAWINGS

RURAL DRIVEWAY
FOR TYPE "A" HMA DIKE

Issued:	Scale:
August 2022	1"=10'
Revised:	Revision No:
Drawing No:	B-1b

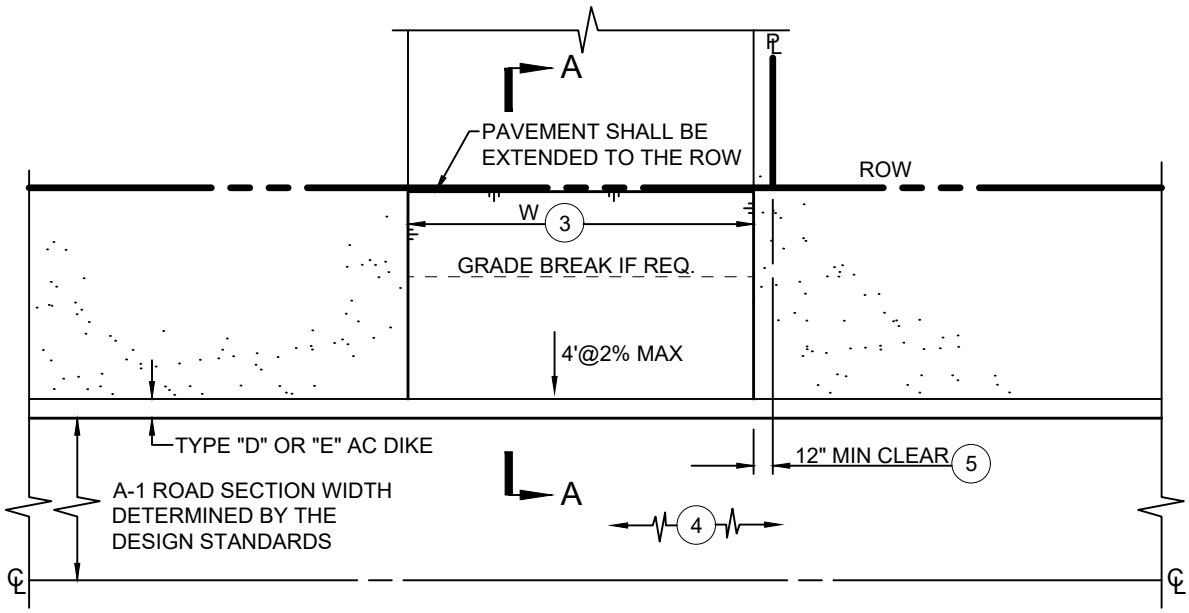

PLAN VIEW

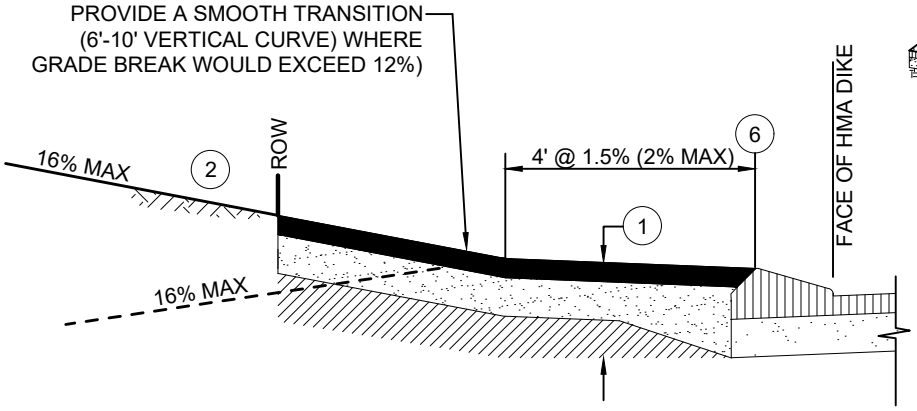

SECTION A-A

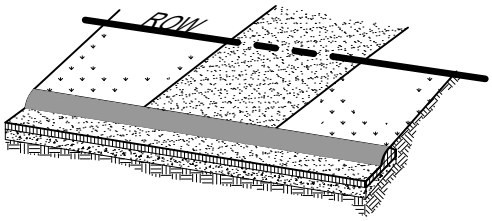

PERSPECTIVE VIEW
NO SCALE

NOTES:

1. WITHIN THE PUBLIC RIGHT-OF-WAY, THE DRIVEWAY SECTION SHALL MATCH THE APPROVED ROAD SECTION OR SHALL MATCH THE EXISTING ROAD SECTION AND SHALL MEET THE FOLLOWING REQUIREMENTS:
   - HOT MIX ASPHALT PER THE DESIGN STANDARDS TO 95% RELATIVE COMPACTION, OVER
   - CLASS II AGGREGATE BASE TO 95% RELATIVE COMPACTION, OVER
   - 12" MINIMUM SUBGRADE TO 95% RELATIVE COMPACTION
2. OUTSIDE THE PUBLIC RIGHT-OF-WAY, THE DRIVEWAY STRUCTURAL SECTION SHALL BE DETERMINED BY THE PROJECT DESIGNER AND SHALL BE IN COMPLIANCE WITH CDF/FIRE REGULATIONS.
3. RESIDENTIAL DRIVEWAY WIDTH SHALL BE 10-FEET MINIMUM TO 20-FEET MAXIMUM, COMMERCIAL-INDUSTRIAL DRIVEWAY WIDTH SHALL BE 12-FEET MINIMUM TO 35-FEET MAXIMUM. ALL DRIVEWAYS SHALL MEET FIRE AGENCY REGULATIONS.
4. REFER TO A-5 SERIES STANDARD DRAWINGS FOR DRIVEWAY SIGHT DISTANCE REQUIREMENTS.
5. THE EDGE OF DRIVEWAY SHALL BE 1-FOOT MINIMUM CLEAR FROM THE PROPERTY LINE.
6. NEW DRIVEWAY APRON SHALL CONFORM TO THE BACK OF EXISTING "D" OR "E" DIKE.
7. FOR NEW DRIVEWAY CONSTRUCTION AGAINST EXISTING ROADWAY, SAWCUT TO REMOVE EXISTING ROADWAY AND RECONSTRUCT PER STANDARD DRAWINGS R-1 AND R-2.
8. AFTER PAVING, APPLY SS1H OIL (OR APPROVED EQUAL) TO ALL SURFACE SEAMS.

DEPARTMENT OF PUBLIC WORKS - STANDARD DRAWINGS

RURAL DRIVEWAY
FOR TYPE "D" & "E" HMA DIKE

Issued:	Scale:
August 2022	NTS
Revised:	Revision No:
Drawing No:	B-1c

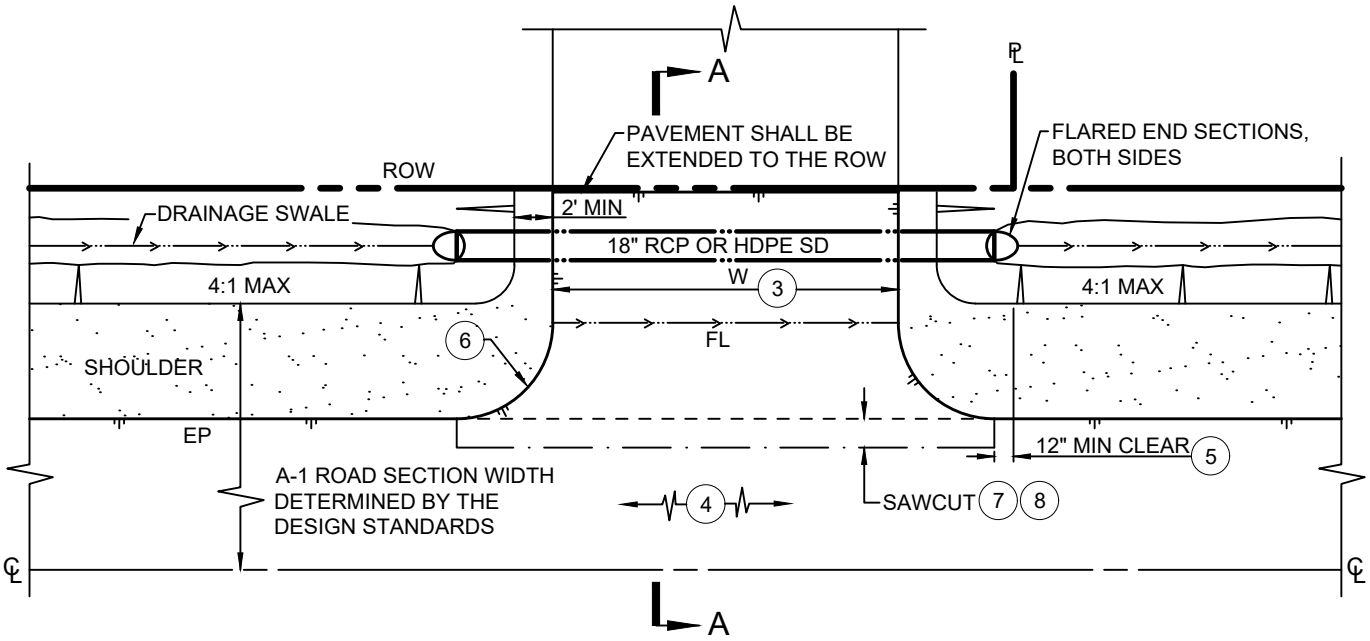

PLAN VIEW

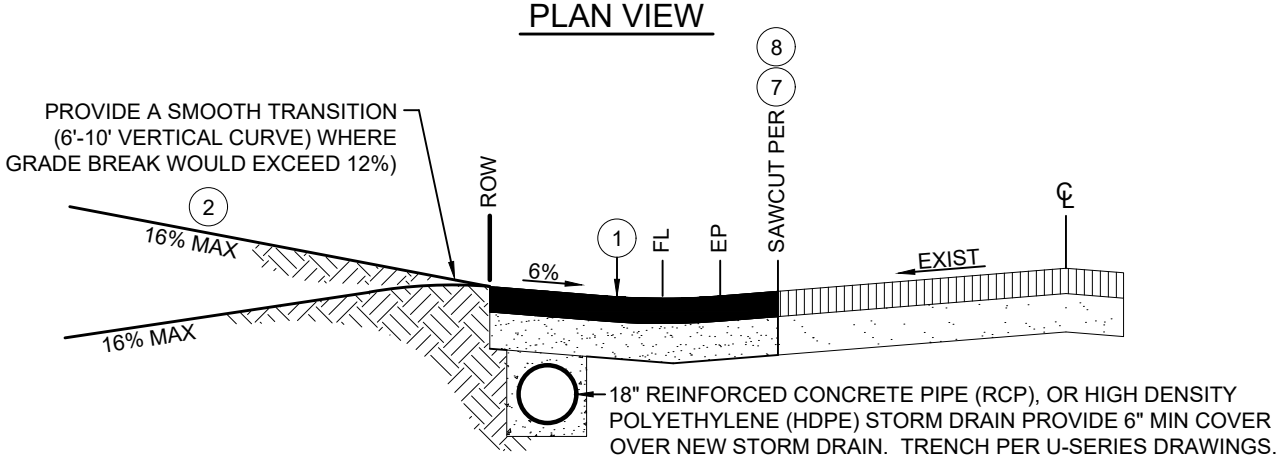

SECTION A-A

NOTES:

1. WITHIN THE PUBLIC RIGHT-OF-WAY, THE DRIVEWAY SECTION SHALL MATCH THE APPROVED ROAD SECTION OR SHALL MATCH THE EXISTING ROAD SECTION AND SHALL MEET THE FOLLOWING REQUIREMENTS:
   - HOT MIX ASPHALT (HMA) PER THE DESIGN STANDARDS TO 95% RELATIVE COMPACTION, OVER
   - CLASS II AGGREGATE BASE TO 95% RELATIVE COMPACTION, OVER
   - 12" MINIMUM SUBGRADE TO 95% RELATIVE COMPACTION
2. OUTSIDE THE PUBLIC RIGHT-OF-WAY, THE DRIVEWAY STRUCTURAL SECTION SHALL BE DETERMINED BY THE PROJECT DESIGNER AND SHALL BE IN COMPLIANCE WITH CDF/FIRE REGULATIONS.
3. RESIDENTIAL DRIVEWAY WIDTH SHALL BE 10-FEET MINIMUM TO 20-FEET MAXIMUM, COMMERCIAL-INDUSTRIAL DRIVEWAY WIDTH SHALL BE 12-FEET MINIMUM TO 35-FEET MAXIMUM. ALL DRIVEWAYS SHALL MEET FIRE AGENCY REGULATIONS.
4. REFER TO A-5 SERIES STANDARD DRAWINGS FOR DRIVEWAY SIGHT DISTANCE REQUIREMENTS.
5. THE END OF DRIVEWAY RETURN SHALL BE 1-FOOT MINIMUM CLEAR FROM THE PROPERTY LINE.
6. THE DRIVEWAY RETURN SHALL HAVE A RADIUS OF 5-FEET FOR RESIDENTIAL (ALTERNATIVE: 5-FEET CHAMFER), AND A RADIUS OF 10-FEET FOR COMMERCIAL-INDUSTRIAL (ALTERNATIVE: 10-FEET CHAMFER).
7. FOR NEW DRIVEWAY CONSTRUCTION AGAINST EXISTING ROADWAY, SAWCUT TO REMOVE EXISTING ROADWAY AND RECONSTRUCT PER STANDARD DRAWINGS R-1 AND R-2.
8. AFTER PAVING, APPLY SS1H OIL (OR APPROVED EQUAL) TO ALL SURFACE SEAMS.

DEPARTMENT OF PUBLIC WORKS - STANDARD DRAWINGS

RURAL DRIVEWAY
FOR EDGE OF PAVEMENT WITH CULVERT

Issued: August 2022	Scale: 1"=10'
Revised:	Revision No:
Drawing No: B-1d	

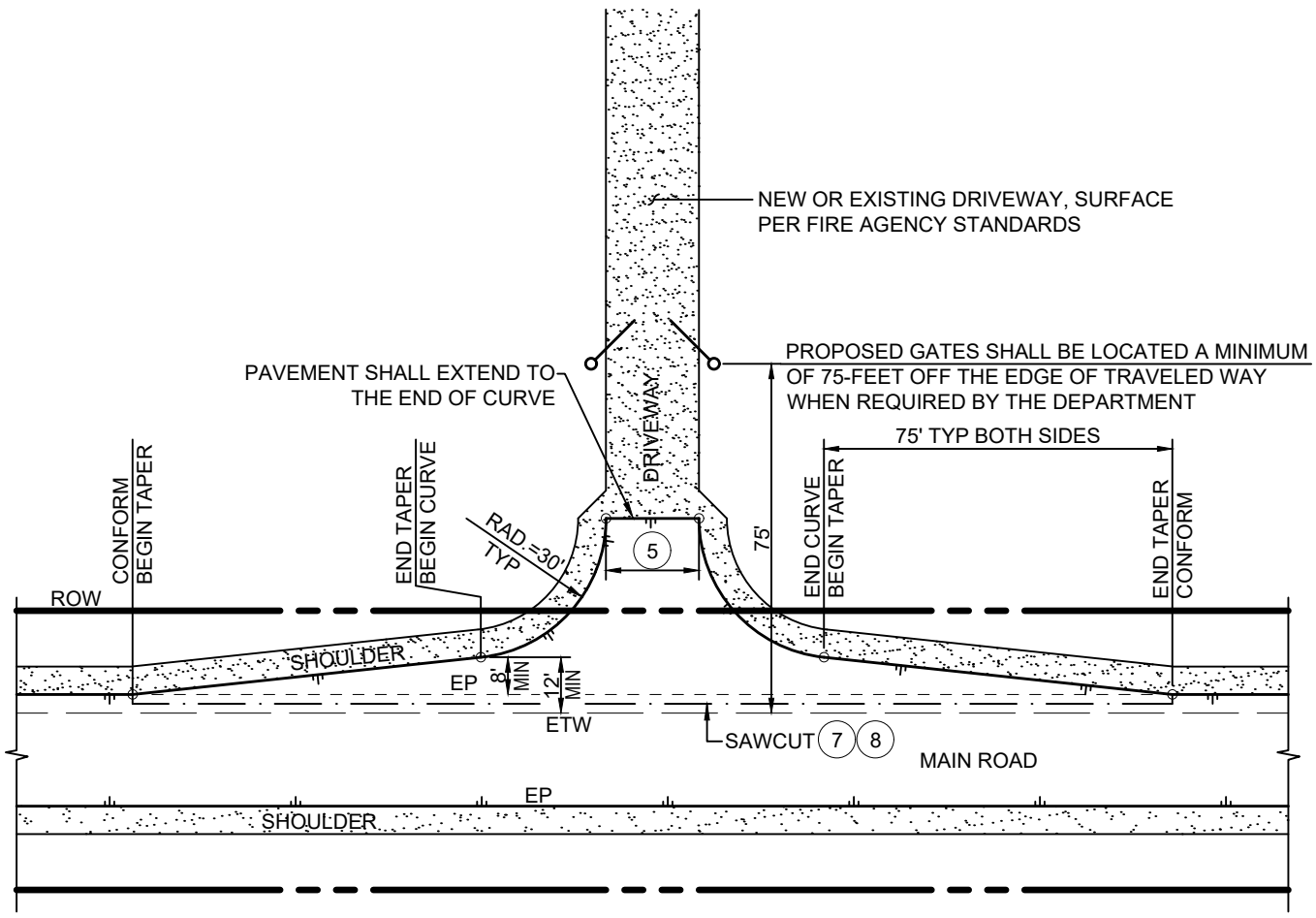

NOTES:

1. THE DEPARTMENT MAY REQUIRE THIS STANDARD FOR MODIFYING EXISTING DRIVEWAYS OR PROPOSING NEW DRIVEWAYS WHICH CONNECT TO COUNTY ROADS HAVING HIGH VEHICLE VOLUMES AND/OR HIGH VEHICLE SPEEDS.
2. ALL ROADSIDE DRAINAGE SHALL BE ACCOMMODATED FOR TO THE SATISFACTION OF THE DEPARTMENT. CONSTRUCTION PLANS AND/OR DRAINAGE CALCULATIONS MAY BE REQUIRED FOR DEPARTMENT APPROVAL PRIOR TO ENCROACHMENT PERMIT ISSUANCE.
3. WITHIN THE PUBLIC RIGHT-OF-WAY THE DRIVEWAY SECTION SHALL MATCH THE EXISTING ROAD SECTION AND SHALL MEET THE FOLLOWING REQUIREMENTS:
   - HOT MIX ASPHALT (HMA) PER THE DESIGN STANDARDS TO 95% RELATIVE COMPACTION, OVER
   - CLASS II AGGREGATE BASE TO 95% RELATIVE COMPACTION, OVER
   - 12" MINIMUM SUBGRADE TO 95% RELATIVE COMPACTION
4. OUTSIDE THE PUBLIC RIGHT-OF-WAY, THE DRIVEWAY STRUCTURAL SECTION SHALL BE DETERMINED BY THE PROJECT DESIGNER AND SHALL BE IN COMPLIANCE WITH FIRE AGENCY REGULATIONS.
5. DRIVEWAY WIDTH SHALL BE 20-FEET MINIMUM TO 35-FEET MAXIMUM. ALL DRIVEWAYS SHALL MEET CALFIRE/FIRE REGULATIONS.
6. REFER TO A-5 SERIES STANDARD DRAWINGS FOR DRIVEWAY SIGHT DISTANCE REQUIREMENTS.
7. FOR NEW DRIVEWAY CONSTRUCTION AGAINST EXISTING ROADWAY, SAWCUT TO REMOVE EXISTING ROADWAY AND RECONSTRUCT PER STANDARD DRAWINGS R-1 AND R-2.
8. AFTER PAVING, APPLY SS1H OIL (OR APPROVED EQUAL) TO ALL SURFACE SEAMS.

DEPARTMENT OF PUBLIC WORKS - STANDARD DRAWINGS

RURAL DRIVEWAY
FOR HIGH SPEED/VOLUME ROADS

Issued:	Scale:
August 2022	1"=40'
Revised:	Revision No:
Drawing No:	B-1e

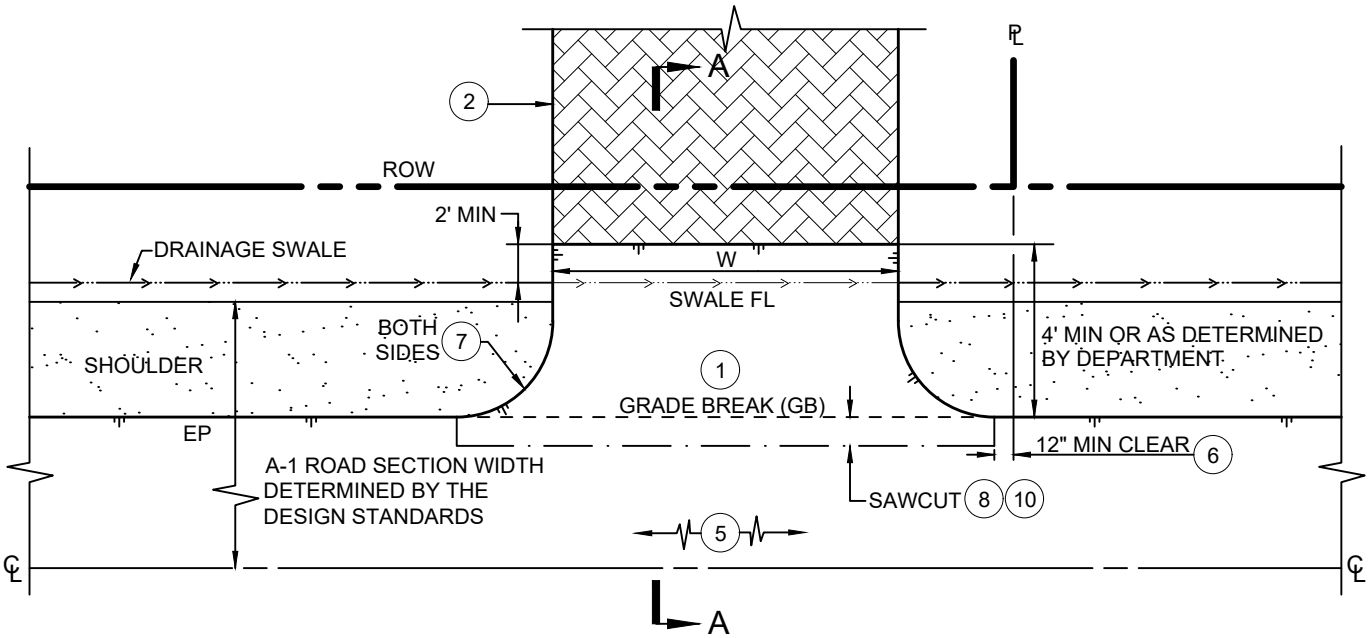

PLAN VIEW

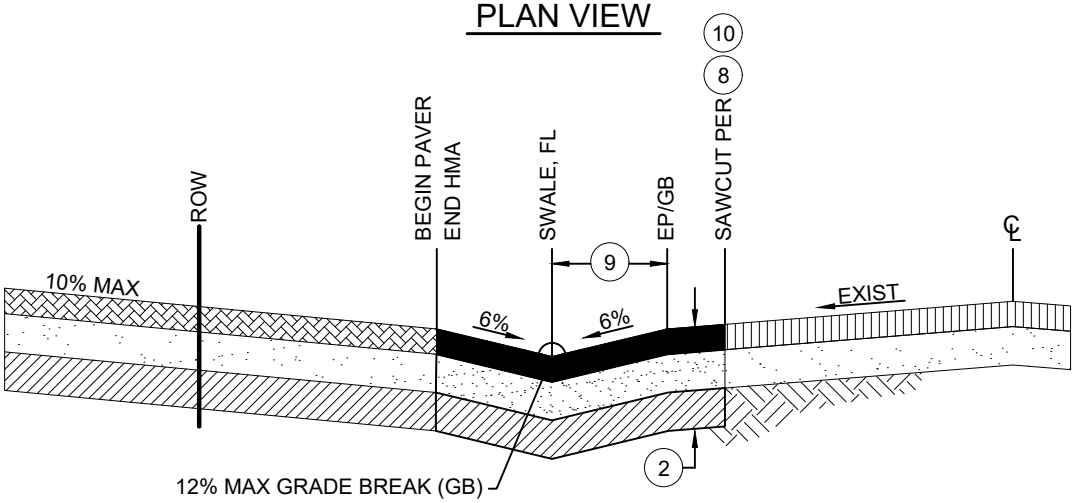

SECTION A-A

NOTES:

1. CONSTRUCT DRIVEWAY PER COUNTY STANDARD B-1a, B-1c, OR B-1d.
2. APPROVED ROAD SECTION SHALL MEET THE FOLLOWING REQUIREMENTS:
   - CONCRETE PAVER, OVER
   - CLASS II AGGREGATE BASE, OVER
   - SCARIFY 12" MINIMUM SUBGRADE TO 95% RELATIVE COMPACTION
3. OUTSIDE THE PUBLIC RIGHT-OF-WAY, THE DRIVEWAY STRUCTURAL SECTION SHALL BE DETERMINED BY THE PROJECT DESIGNER AND SHALL BE IN COMPLIANCE WITH CDF/FIRE REGULATIONS.
4. RESIDENTIAL DRIVEWAY WIDTH SHALL BE 10' MINIMUM TO 20' MAXIMUM. ALL DRIVEWAYS SHALL MEET FIRE AGENCY REGULATIONS.
5. REFER TO A-5 SERIES STANDARD DRAWINGS FOR DRIVEWAY SIGHT DISTANCE REQUIREMENTS.
6. THE END OF DRIVEWAY RETURN SHALL BE 1-FOOT MINIMUM CLEAR FROM THE PROPERTY LINE.
7. THE DRIVEWAY RETURN SHALL HAVE A RADIUS OF 5-FEET FOR RESIDENTIAL (ALTERNATIVE: 5-FEET CHAMFER).
8. FOR NEW DRIVEWAY CONSTRUCTION AGAINST EXISTING ROADWAY, SAWCUT TO REMOVE EXISTING ROADWAY AND RECONSTRUCT PER DRAWINGS R-1 AND R-2.
9. DISTANCE TO MATCH ROADSIDE DRAINAGE SWALE PER SERIES A-1 DRAWING REQUIREMENTS.
10. AFTER PAVING, APPLY SS1H OIL (OR APPROVED EQUAL) TO ALL SURFACE SEAMS.

DEPARTMENT OF PUBLIC WORKS - STANDARD DRAWINGS

RURAL RESIDENTIAL DRIVEWAY

USE OF PAVERS WITHIN THE RIGHT-OF-WAY

Issued: August 2022	Scale: 1"=10'
Revised:	Revision No:
Drawing No: B-1f	

REFER TO STANDARD DRAWING B-3 FOR URBAN COMMERCIAL-INDUSTRIAL LAYOUT STANDARDS

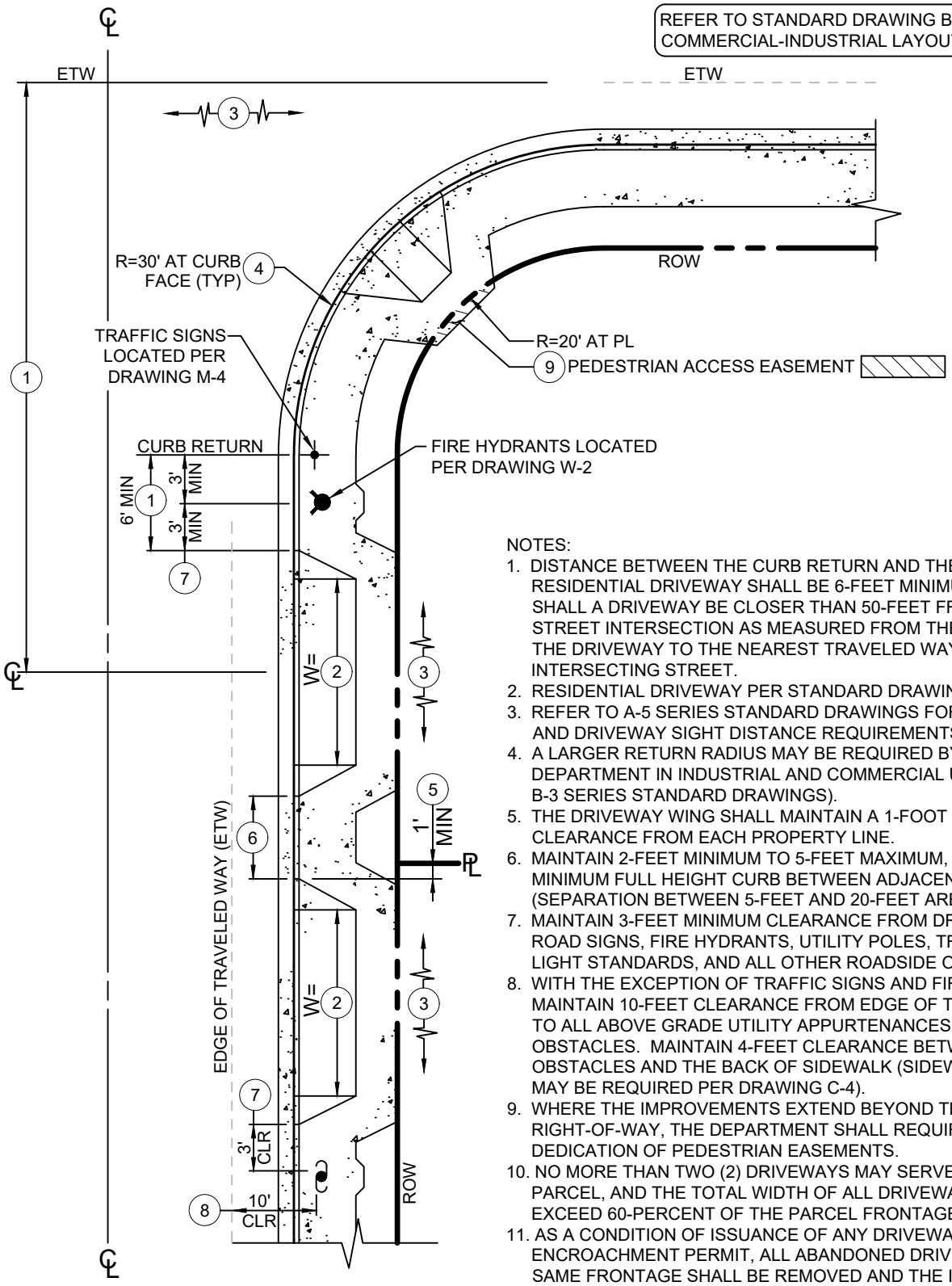

NOTES:

1. DISTANCE BETWEEN THE CURB RETURN AND THE FIRST RESIDENTIAL DRIVEWAY SHALL BE 6-FEET MINIMUM. IN NO CASE SHALL A DRIVEWAY BE CLOSER THAN 50-FEET FROM NEAREST STREET INTERSECTION AS MEASURED FROM THE CENTERLINE OF THE DRIVEWAY TO THE NEAREST TRAVELED WAY OF THE INTERSECTING STREET.
2. RESIDENTIAL DRIVEWAY PER STANDARD DRAWING B-2a.
3. REFER TO A-5 SERIES STANDARD DRAWINGS FOR INTERSECTION AND DRIVEWAY SIGHT DISTANCE REQUIREMENTS.
4. A LARGER RETURN RADIUS MAY BE REQUIRED BY THE DEPARTMENT IN INDUSTRIAL AND COMMERCIAL USES (REFER TO B-3 SERIES STANDARD DRAWINGS).
5. THE DRIVEWAY WING SHALL MAINTAIN A 1-FOOT MINIMUM CLEARANCE FROM EACH PROPERTY LINE.
6. MAINTAIN 2-FEET MINIMUM TO 5-FEET MAXIMUM, OR 20-FEET MINIMUM FULL HEIGHT CURB BETWEEN ADJACENT DRIVEWAYS (SEPARATION BETWEEN 5-FEET AND 20-FEET ARE NOT ALLOWED).
7. MAINTAIN 3-FEET MINIMUM CLEARANCE FROM DRIVEWAY WING TO ROAD SIGNS, FIRE HYDRANTS, UTILITY POLES, TRAFFIC SIGNALS, LIGHT STANDARDS, AND ALL OTHER ROADSIDE OBSTACLES.
8. WITH THE EXCEPTION OF TRAFFIC SIGNS AND FIRE HYDRANTS, MAINTAIN 10-FEET CLEARANCE FROM EDGE OF TRAVELED WAY TO ALL ABOVE GRADE UTILITY APPURTENANCES AND ROADSIDE OBSTACLES. MAINTAIN 4-FEET CLEARANCE BETWEEN ALL SUCH OBSTACLES AND THE BACK OF SIDEWALK (SIDEWALK WIDENING MAY BE REQUIRED PER DRAWING C-4).
9. WHERE THE IMPROVEMENTS EXTEND BEYOND THE RIGHT-OF-WAY, THE DEPARTMENT SHALL REQUIRE THE DEDICATION OF PEDESTRIAN EASEMENTS.
10. NO MORE THAN TWO (2) DRIVEWAYS MAY SERVE A SINGLE PARCEL, AND THE TOTAL WIDTH OF ALL DRIVEWAYS SHALL NOT EXCEED 60-PERCENT OF THE PARCEL FRONTAGE.
11. AS A CONDITION OF ISSUANCE OF ANY DRIVEWAY ENCROACHMENT PERMIT, ALL ABANDONED DRIVEWAYS ON THE SAME FRONTAGE SHALL BE REMOVED AND THE IMPROVEMENTS RESTORED PER THE RESPECTIVE DESIGN STANDARDS.
12. UNDER NO CIRCUMSTANCES SHALL UTILITY LIDS AND CONCRETE COLLARS BE LOCATED WITHIN DRIVEWAY APRONS.

DEPARTMENT OF PUBLIC WORKS - STANDARD DRAWINGS

URBAN DRIVEWAY
LAYOUT STANDARDS

Issued:	Scale:
August 2022	NTS
Revised:	Revision No:
Drawing No:	B-2

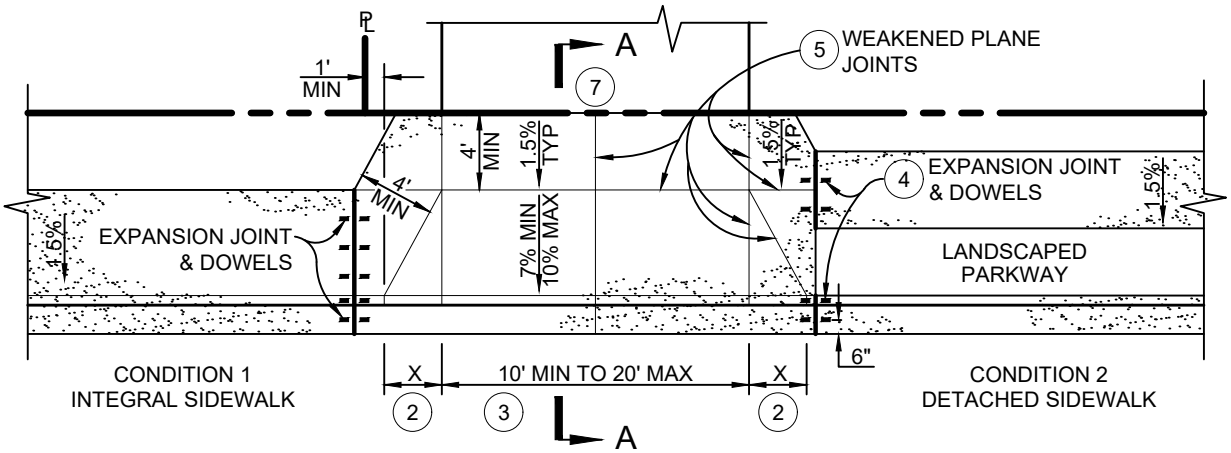

PLAN

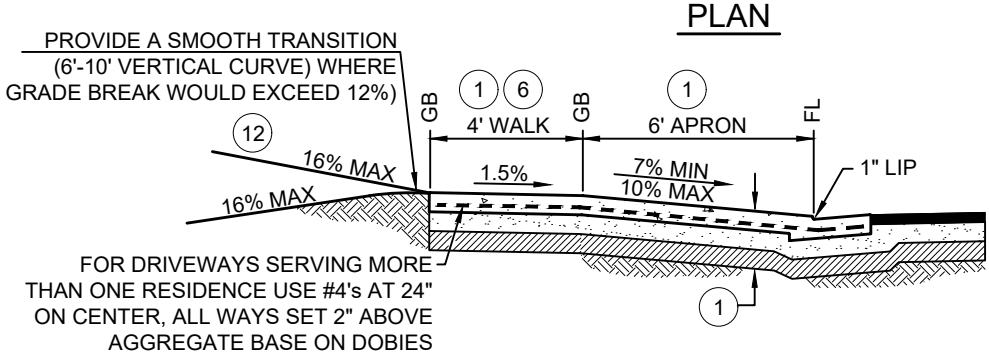

SECTION A-A

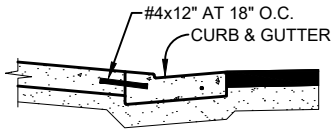

WHEN CURB & GUTTER IS PLACED PRIOR TO DRIVEWAY CONSTRUCTION THEN THE NEW DRIVEWAY SHALL BE DOWELED INTO THE CURB AND GUTTER WITH #4x12" AT 18" OC

COLD JOINT DETAIL

NOTES:

1. CONCRETE DRIVEWAY SHALL CONFORM TO STATE STANDARD SPECIFICATIONS, 520 LBS/CY CEMENTITIOUS MATERIAL [5-1/2 SACK]. CONCRETE CURING SHALL BE BY PIGMENTED CURING COMPOUND METHOD USING WHITE PIGMENT TYPE. TYPICAL SECTION SHALL BE:
   - 6-INCH MIN PORTLAND CEMENT CONCRETE, OVER
   - 6" MIN CLASS II AGGREGATE BASE TO 95% RELATIVE COMPACTION, OVER
   - 12" MINIMUM SUBGRADE TO 95% RELATIVE COMPACTION

   IF THE R-VALUE OF THE NATIVE MATERIAL IS 55 OR GREATER THEN THE 6" OF AGGREGATE BASE MAY BE SUBSTITUTED WITH COMPACTED NATIVE MATERIAL.
   A COURSE BROOM FINISH TRANSVERSE TO THE LINE OF TRAFFIC SHALL BE USED ON THE APRON AND WINGS. THE 4-FEET WIDE SIDEWALK SHALL HAVE A LIGHT BROOM FINISH PARALLEL TO THE LINE OF TRAFFIC.
2. X = 3-FEET (6h:1v) EXCEPT FOR CURB HEIGHTS OVER 8-INCHES WHERE 4h:1v SLOPES SHALL BE USED ON CURB SLOPE.
3. DRIVEWAY WIDTH (W) SHALL BE 10-FEET MIN AND 20-FEET MAX FOR RESIDENTIAL ACCESS. FOR DRIVEWAYS SERVING MORE THAN ONE RESIDENCE W EQUALS THE INTERIOR ROAD WIDTH AS GOVERNED BY THE LOCAL FIRE AGENCY STANDARDS.
4. EXPANSION JOINTS (EJ) SHALL BE CONSTRUCTED AS SHOWN. 1/2"Øx18" SMOOTH, GREASED DOWELS SHALL BE PLACED IN THE EJ, ONE IN CURB FACE, ONE IN GUTTER, AND AT 18-INCHES ON CENTER IN SIDEWALKS PER STANDARD DRAWING C-1.
5. WEAKENED PLANE JOINTS (WPJ) SHALL BE CONSTRUCTED AS SHOWN AND PER STANDARD DRAWING C-1.
6. THE CROSS SLOPE OF THE 4-FEET WIDE SIDEWALK SHALL BE 1.5% (3/16-INCH PER FOOT), BUT NOT EXCEED 2% (1/4-INCH PER FOOT). MINIMUM SIDEWALK WIDTH FOR CLEAR PASSAGE SHALL BE MAINTAINED (NO OBSTACLES LOCATED WITHIN).
7. WHERE THE IMPROVEMENTS EXTEND BEYOND THE RIGHT-OF-WAY, AN OFFER OF DEDICATION FOR PEDESTRIAN EASEMENT/S WILL BE REQUIRED BY THE DEPARTMENT.
8. REFER TO A-5 SERIES STANDARD DRAWINGS FOR DRIVEWAY SIGHT DISTANCE REQUIREMENTS.
9. FOR NEW DRIVEWAY CONSTRUCTION AGAINST EXISTING ROADWAY, SAWCUT TO REMOVE EXISTING ROADWAY AND RECONSTRUCT PER DRAWINGS R-1 AND R-3.
10. THE HIGH VOLUME DRIVEWAY STANDARD B-3b SHALL BE USED AT ENTRANCES TO RESIDENTIAL DRIVEWAYS THAT EXCEED 200 VEHICLES PER PM PEAK HOUR AND EXIT ONTO A COLLECTOR OR ARTERIAL ROAD. THE DEPARTMENT RESERVES THE RIGHT TO REQUIRE THE USE OF A HIGH VOLUME DRIVEWAY BASED ON OTHER EXTENUATING CONDITIONS.
11. UNDER NO CIRCUMSTANCES SHALL UTILITY LIDS AND CONCRETE COLLARS BE LOCATED WITHIN DRIVEWAY APRONS.
12. OUTSIDE THE PUBLIC RIGHT-OF-WAY, THE DRIVEWAY STRUCTURAL SECTION SHALL BE DETERMINED BY THE PROJECT DESIGNER AND SHALL BE IN COMPLIANCE WITH CDF/FIRE REGULATIONS.

DEPARTMENT OF PUBLIC WORKS - STANDARD DRAWINGS

URBAN DRIVEWAY

RESIDENTIAL DRIVEWAY

Issued:	Scale:
August 2022	1"=10'
Revised:	Revision No:
Drawing No:	B-2a

REFER TO STANDARD DRAWING B-1 FOR RURAL COMMERCIAL-INDUSTRIAL LAYOUT STANDARDS

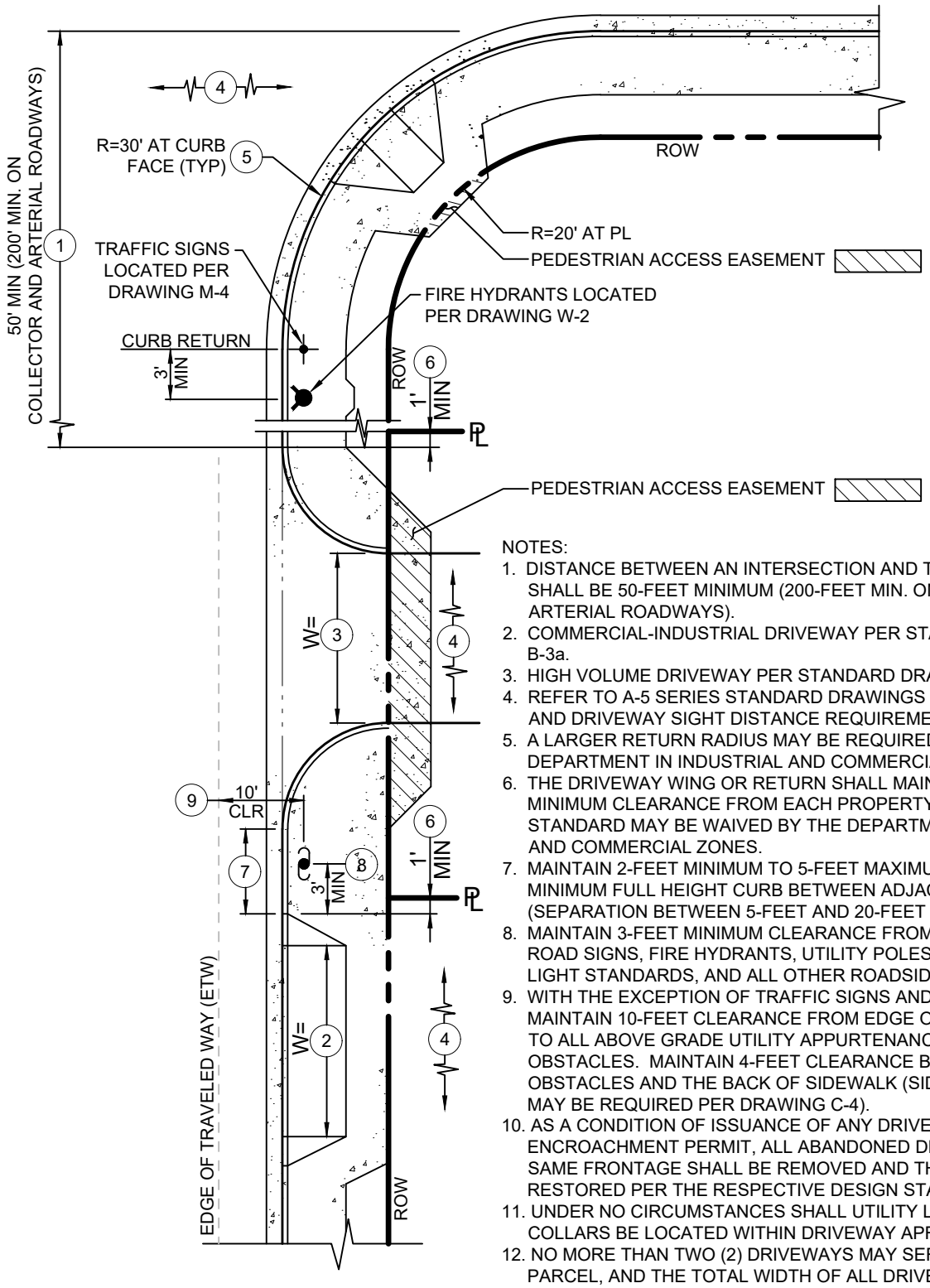

NOTES:

1. DISTANCE BETWEEN AN INTERSECTION AND THE FIRST DRIVEWAY SHALL BE 50-FEET MINIMUM (200-FEET MIN. ON COLLECTOR AND ARTERIAL ROADWAYS).
2. COMMERCIAL-INDUSTRIAL DRIVEWAY PER STANDARD DRAWING B-3a.
3. HIGH VOLUME DRIVEWAY PER STANDARD DRAWING B-3b.
4. REFER TO A-5 SERIES STANDARD DRAWINGS FOR INTERSECTION AND DRIVEWAY SIGHT DISTANCE REQUIREMENTS.
5. A LARGER RETURN RADIUS MAY BE REQUIRED BY THE DEPARTMENT IN INDUSTRIAL AND COMMERCIAL ZONES.
6. THE DRIVEWAY WING OR RETURN SHALL MAINTAIN A 1-FOOT MINIMUM CLEARANCE FROM EACH PROPERTY LINE. THIS STANDARD MAY BE WAIVED BY THE DEPARTMENT IN INDUSTRIAL AND COMMERCIAL ZONES.
7. MAINTAIN 2-FEET MINIMUM TO 5-FEET MAXIMUM, OR 20-FEET MINIMUM FULL HEIGHT CURB BETWEEN ADJACENT DRIVEWAYS (SEPARATION BETWEEN 5-FEET AND 20-FEET ARE NOT ALLOWED).
8. MAINTAIN 3-FEET MINIMUM CLEARANCE FROM DRIVEWAY WING TO ROAD SIGNS, FIRE HYDRANTS, UTILITY POLES, TRAFFIC SIGNALS, LIGHT STANDARDS, AND ALL OTHER ROADSIDE OBSTACLES.
9. WITH THE EXCEPTION OF TRAFFIC SIGNS AND FIRE HYDRANTS, MAINTAIN 10-FEET CLEARANCE FROM EDGE OF TRAVELED WAY TO ALL ABOVE GRADE UTILITY APPURTENANCES AND ROADSIDE OBSTACLES. MAINTAIN 4-FEET CLEARANCE BETWEEN ALL SUCH OBSTACLES AND THE BACK OF SIDEWALK (SIDEWALK WIDENING MAY BE REQUIRED PER DRAWING C-4).
10. AS A CONDITION OF ISSUANCE OF ANY DRIVEWAY ENCROACHMENT PERMIT, ALL ABANDONED DRIVEWAYS ON THE SAME FRONTAGE SHALL BE REMOVED AND THE IMPROVEMENTS RESTORED PER THE RESPECTIVE DESIGN STANDARDS.
11. UNDER NO CIRCUMSTANCES SHALL UTILITY LIDS AND CONCRETE COLLARS BE LOCATED WITHIN DRIVEWAY APRONS.
12. NO MORE THAN TWO (2) DRIVEWAYS MAY SERVE A SINGLE PARCEL, AND THE TOTAL WIDTH OF ALL DRIVEWAYS SHALL NOT EXCEED 60-PERCENT OF THE PARCEL FRONTAGE.

DEPARTMENT OF PUBLIC WORKS - STANDARD DRAWINGS

COMMERCIAL DRIVEWAY
LAYOUT STANDARDS

Issued:	Scale:
August 2022	NTS
Revised:	Revision No:
Drawing No:	B-3

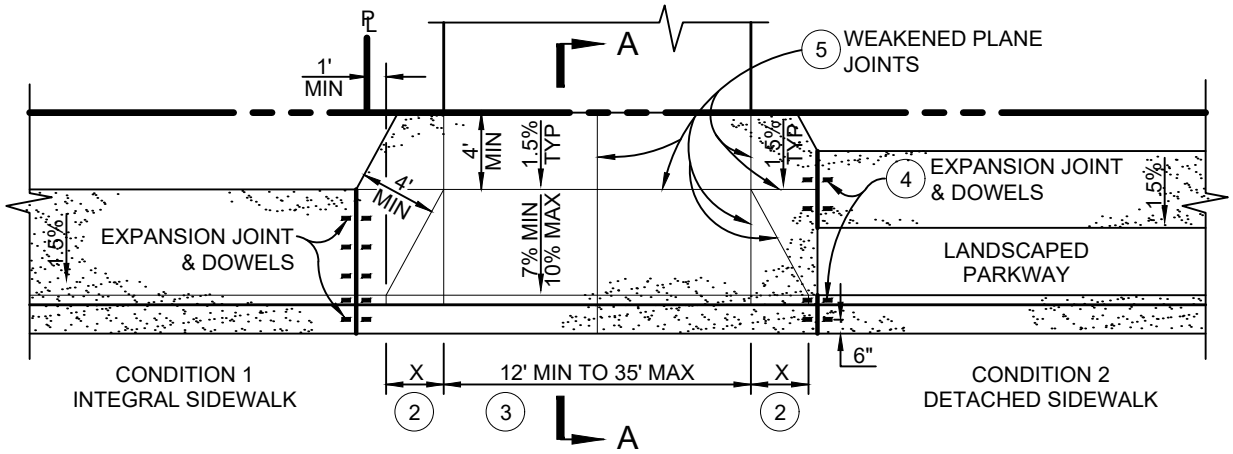

PLAN

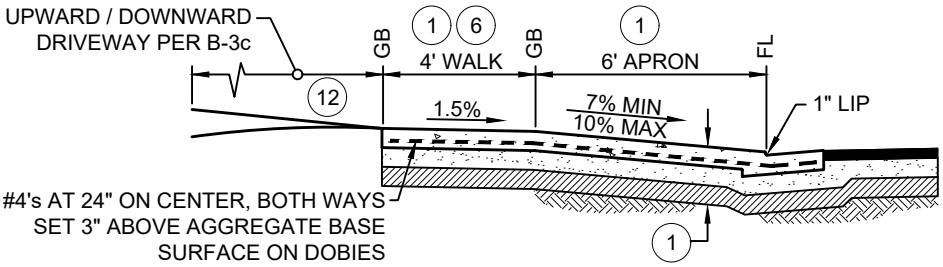

SECTION A-A

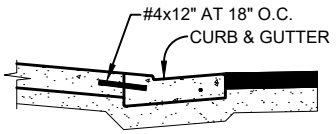

WHEN CURB & GUTTER IS PLACED PRIOR TO DRIVEWAY CONSTRUCTION THEN THE NEW DRIVEWAY SHALL BE DOWELED INTO THE CURB AND GUTTER WITH #4x12" AT 18" OC

COLD JOINT DETAIL

NOTES:

1. CONCRETE DRIVEWAY SHALL CONFORM TO STATE STANDARD SPECIFICATIONS, 520 LBS/CY CEMENTITIOUS MATERIAL [5-1/2 SACK]. CONCRETE CURING SHALL BE BY PIGMENTED CURING COMPOUND METHOD USING WHITE PIGMENT TYPE. TYPICAL SECTION SHALL BE:
   - 8-INCH MINIMUM PORTLAND CEMENT CONCRETE REINFORCED WITH #4's AT 24" OC BOTH WAYS, OVER
   - 6" MIN CLASS II AGGREGATE BASE TO 95% RELATIVE COMPACTION, OVER
   - 12" MINIMUM SUBGRADE TO 95% RELATIVE COMPACTION

   IF THE R-VALUE OF THE NATIVE MATERIAL IS 55 OR GREATER THEN THE 6-INCHES OF AGGREGATE BASE MAY BE SUBSTITUTED WITH COMPACTED NATIVE MATERIAL.
   A COURSE BROOM FINISH TRANSVERSE TO THE LINE OF TRAFFIC SHALL BE USED ON THE APRON AND WINGS. THE 4-FEET WIDE SIDEWALK SHALL HAVE A LIGHT BROOM FINISH PARALLEL TO THE LINE OF TRAFFIC.
2. X = 3-FEET (6h:1v) EXCEPT FOR CURB HEIGHTS OVER 8-INCHES WHERE 4h:1v SLOPES SHALL BE USED ON CURB SLOPE.
3. W = DRIVEWAY WIDTH SHALL BE 12-FEET MINIMUM AND 35-FEET MAXIMUM FOR COMMERCIAL-INDUSTRIAL ACCESS.
4. EXPANSION JOINTS (EJ) SHALL BE CONSTRUCTED AS SHOWN. 1/2"Øx18" SMOOTH, GREASED DOWELS SHALL BE PLACED IN THE EJ, ONE IN CURB FACE, ONE IN GUTTER, AND AT 18-INCHES ON CENTER IN SIDEWALKS PER STANDARD DRAWING C-1.
5. WEAKENED PLANE JOINTS (WPJ) SHALL BE CONSTRUCTED AS SHOWN AND PER STANDARD DRAWING C-1.
6. THE CROSS SLOPE OF THE 4-FEET WIDE SIDEWALK SHALL BE 1.5% (3/16-INCH PER FOOT), BUT NOT EXCEED 2% (1/4-INCH PER FOOT). MINIMUM SIDEWALK WIDTH FOR CLEAR PASSAGE SHALL BE MAINTAINED (NO OBSTACLES LOCATED WITHIN).
7. WHERE THE IMPROVEMENTS EXTEND BEYOND THE RIGHT-OF-WAY, THE ACQUISITION OF PEDESTRIAN EASEMENTS SHALL BE REQUIRED BY THE DEPARTMENT.
8. REFER TO A-5 SERIES DRAWINGS FOR DRIVEWAY SIGHT DISTANCE REQUIREMENTS.
9. FOR NEW DRIVEWAY CONSTRUCTION AGAINST EXISTING ROADWAY, SAWCUT TO REMOVE EXISTING ROADWAY AND RECONSTRUCT PER DRAWINGS R-1 AND R-3.
10. THE HIGH VOLUME DRIVEWAY STANDARD B-3b SHALL BE USED AT ENTRANCES THAT EXCEED 200 VEHICLES PER PM PEAK HOUR AND EXIT ONTO AN ARTERIAL ROAD. THE DEPARTMENT RESERVES THE RIGHT TO REQUIRE THE USE OF A HIGH VOLUME DRIVEWAY BASED ON OTHER EXTENUATING CONDITIONS.
11. UNDER NO CIRCUMSTANCES SHALL UTILITY LIDS AND CONCRETE COLLARS BE LOCATED WITHIN DRIVEWAY APRONS.
12. OUTSIDE THE PUBLIC RIGHT-OF-WAY, THE DRIVEWAY STRUCTURAL SECTION SHALL BE DETERMINED BY THE PROJECT DESIGNER AND SHALL BE IN COMPLIANCE WITH CDF/FIRE REGULATIONS.

DEPARTMENT OF PUBLIC WORKS - STANDARD DRAWINGS

COMMERCIAL DRIVEWAY

TYPICAL DRIVEWAY

Issued: August 2022	Scale: 1"=10'
Revised:	Revision No:
Drawing No: B-3a	

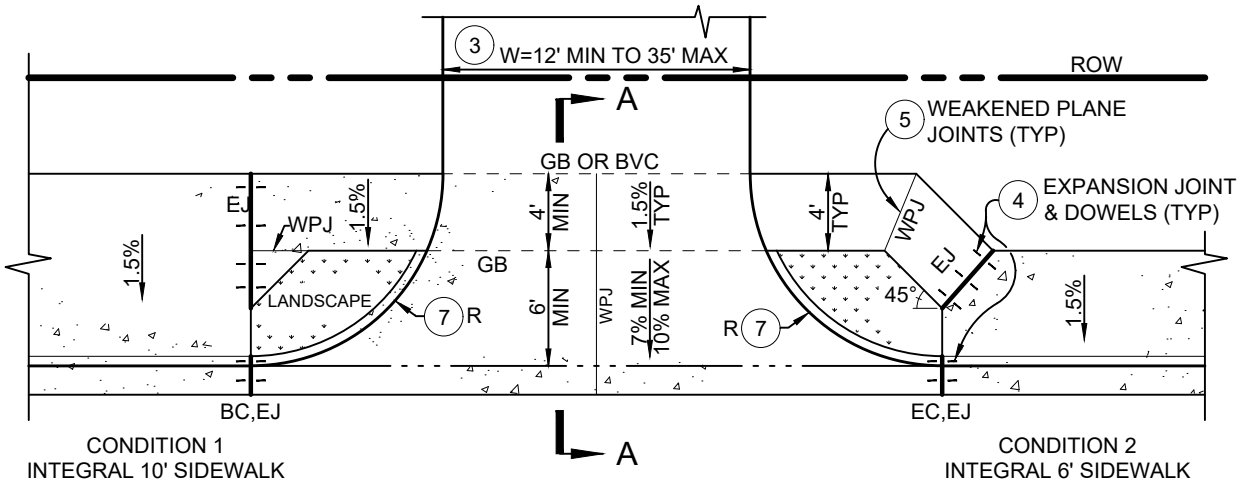

CONDITION 1
INTEGRAL 10' SIDEWALK

CONDITION 2
INTEGRAL 6' SIDEWALK

PLAN

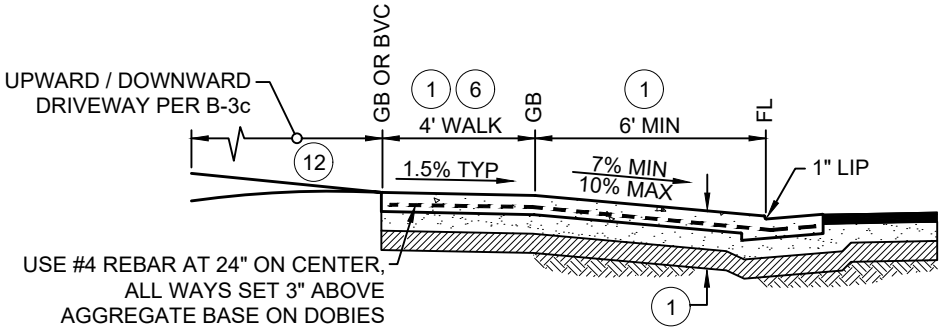

SECTION A-A

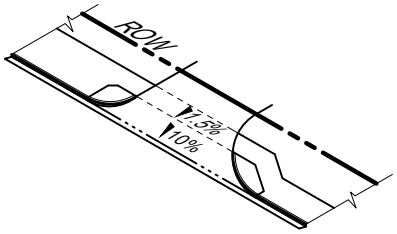

PERSPECTIVE VIEW

NO SCALE

NOTES:

1. CONCRETE DRIVEWAY SHALL CONFORM TO STATE STANDARD SPECIFICATIONS, 520 LBS/CY CEMENTITIOUS MATERIAL [5-1/2 SACK]. CONCRETE CURING SHALL BE BY PIGMENTED CURING COMPOUND METHOD USING WHITE PIGMENT TYPE. TYPICAL SECTION SHALL BE:
   - 8-INCH MINIMUM PORTLAND CEMENT CONCRETE REINFORCED WITH #4's AT 24" OC BOTH WAYS, OVER
   - 6" MIN CLASS II AGGREGATE BASE TO 95% RELATIVE COMPACTION, OVER
   - 12" MINIMUM SUBGRADE TO 95% RELATIVE COMPACTION

   IF THE R-VALUE OF THE NATIVE MATERIAL IS 55 OR GREATER THEN THE 6-INCHES OF AGGREGATE BASE MAY BE SUBSTITUTED WITH COMPACTED NATIVE MATERIAL.
   A COURSE BROOM FINISH TRANSVERSE TO THE LINE OF TRAFFIC SHALL BE USED ON THE APRON AND WINGS.
2. DIMENSIONS "W" & "R" AND PARKWAY WIDTH SHALL BE SHOWN ON PLANS.
3. W = DRIVEWAY WIDTH SHALL BE 12-FEET MINIMUM AND 35-FEET MAXIMUM FOR COMMERCIAL-INDUSTRIAL ACCESS.
4. EXPANSION JOINTS (EJ) SHALL BE CONSTRUCTED AS SHOWN. 1/2"Øx18" SMOOTH, GREASED DOWELS SHALL BE PLACED IN THE EJ, ONE IN CURB FACE, ONE IN GUTTER, AND AT 18-INCHES ON CENTER IN SIDEWALKS PER STANDARD DRAWING C-1.
5. WEAKENED PLANE JOINTS (WPJ) SHALL BE CONSTRUCTED AS SHOWN AND PER STANDARD DRAWING C-1.
6. THE CROSS SLOPE OF THE 4-FEET WIDE SIDEWALK SHALL BE 1.5% (3/16-INCH PER FOOT), BUT NOT EXCEED 2% (1/4-INCH PER FOOT). MINIMUM SIDEWALK WIDTH FOR CLEAR PASSAGE SHALL BE MAINTAINED (NO OBSTACLES LOCATED WITHIN).
7. RADIUS (R) SHALL BE 10-FEET.
8. WHERE THE IMPROVEMENTS EXTEND BEYOND THE RIGHT-OF-WAY, THE ACQUISITION OF PEDESTRIAN EASEMENTS SHALL BE REQUIRED BY THE DEPARTMENT.
8. REFER TO A-5 SERIES DRAWINGS FOR DRIVEWAY SIGHT DISTANCE REQUIREMENTS.
9. FOR NEW DRIVEWAY CONSTRUCTION AGAINST EXISTING ROADWAY, SAWCUT TO REMOVE EXISTING ROADWAY AND RECONSTRUCT PER DRAWINGS R-1 AND R-3.
10. THIS HIGH VOLUME DRIVEWAY STANDARD SHALL BE USED AT ENTRANCES THAT EXCEED 200 VEHICLES PER PM PEAK HOUR AND EXIT ONTO AN ARTERIAL ROAD, OR WHERE REQUIRED BY THE DEPARTMENT.
11. UNDER NO CIRCUMSTANCES SHALL UTILITY LIDS AND CONCRETE COLLARS BE LOCATED WITHIN DRIVEWAY APRONS.
12. OUTSIDE THE PUBLIC RIGHT-OF-WAY, THE DRIVEWAY STRUCTURAL SECTION SHALL BE DETERMINED BY THE PROJECT DESIGNER AND SHALL BE IN COMPLIANCE WITH CDF/FIRE REGULATIONS.

DEPARTMENT OF PUBLIC WORKS - STANDARD DRAWINGS

COMMERCIAL DRIVEWAY
HIGH VOLUME DRIVEWAY

Issued: August 2022	Scale: 1"=10'
Revised:	Revision No:
Drawing No: B-3b	

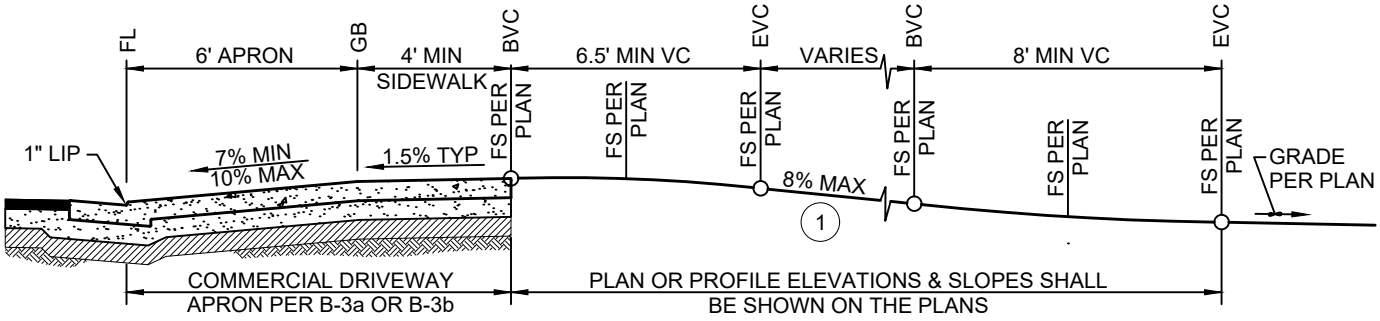

DOWNWARD DRIVEWAY

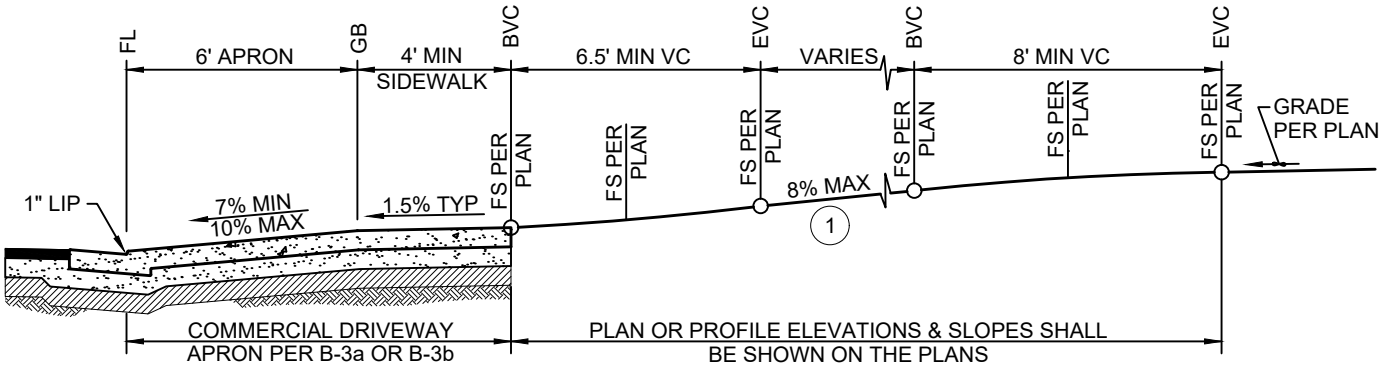

UPWARD DRIVEWAY

NOTES:

1. THE MAXIMUM SLOPE OF 8% SHALL NOT BE EXCEEDED ALONG ANY LONGITUDINAL PORTION OF THE NEW DRIVEWAY. THE SLOPE MAY BE INCREASED TO 12% WITH SPECIAL CONSTRUCTION TECHNIQUES AND PRIOR DEPARTMENT APPROVAL.
2. THE CROSS SLOPE OF THE 4-FEET WIDE SIDEWALK SHALL BE 1.5% (3/16-INCH PER FOOT), BUT NOT EXCEED 2% (1/4-INCH PER FOOT). MINIMUM SIDEWALK WIDTH FOR CLEAR PASSAGE SHALL BE MAINTAINED (NO OBSTACLES LOCATED WITHIN).
3. THIS DRAWING IS INTENDED TO BE USED IN CONJUNCTION WITH DRAWINGS B-3a AND B-3b.

ABBREVIATIONS:

BVC	BEGIN VERTICAL CURVE
EVC	END VERTICAL CURVE
FL	FLOWLINE
FS	FINISHED SURFACE (ELEVATION)
GB	GRADE BREAK
VC	VERTICAL CURVE

DEPARTMENT OF PUBLIC WORKS - STANDARD DRAWINGS

COMMERCIAL DRIVEWAY
UPWARD/DOWNWARD APPROACHES

Issued:	Scale:
August 2022	1"=5'
Revised:	Revision No:
Drawing No:	B-3c

NOTES:

1. EXPANSION JOINTS (EJ) SHALL BE PLACED AT CURB RETURNS, DRIVEWAYS, STORM DRAIN CATCH BASINS, AROUND UTILITY POLES, AT LONGITUDINAL CURB GUTTER AND SIDEWALK INTERVALS NOT TO EXCEED 30-FEET, AND AT ALL OTHER LOCATIONS AS DIRECTED BY THE DEPARTMENT. THE INTERVALS BETWEEN EXPANSION JOINTS SHALL VARY TO ALLOW MATCHING OF JOINTS IN ADJACENT EXISTING IMPROVEMENTS AS APPLICABLE.
2. WEAKENED PLANE JOINTS (WPJ) SHALL BE A MINIMUM 1-INCH IN DEPTH AND PLACED AT LONGITUDINAL CURB GUTTER AND SIDEWALK INTERVALS NOT EXCEEDING 10-FEET BETWEEN EXPANSION JOINTS. THE INTERVALS BETWEEN WEAKENED PLANE JOINTS SHALL VARY TO ALLOW MATCHING OF JOINTS IN ADJACENT EXISTING IMPROVEMENTS AS APPLICABLE.
3. 1/2"Ø x 18" SMOOTH, GREASED DOWELS SHALL BE PLACED AT ALL EXPANSION JOINTS, ONE IN THE NEW CURB FACE, ONE IN THE NEW GUTTER, AND AT 18-INCHES ON CENTER IN NEW SIDEWALK.
4. WHEN PLACED IN SIDEWALKS, BOTH EXPANSION JOINTS AND WEAKENED PLANE JOINTS SHALL EXTEND THROUGH THE ADJACENT CURB AND GUTTER.
5. REFER TO RESPECTIVE IMPROVEMENT (CURB, GUTTER, SIDEWALK, RAMP, DRIVEWAY, ETC.) STANDARD DRAWING FOR ADDITIONAL CONSTRUCTION INFORMATION.

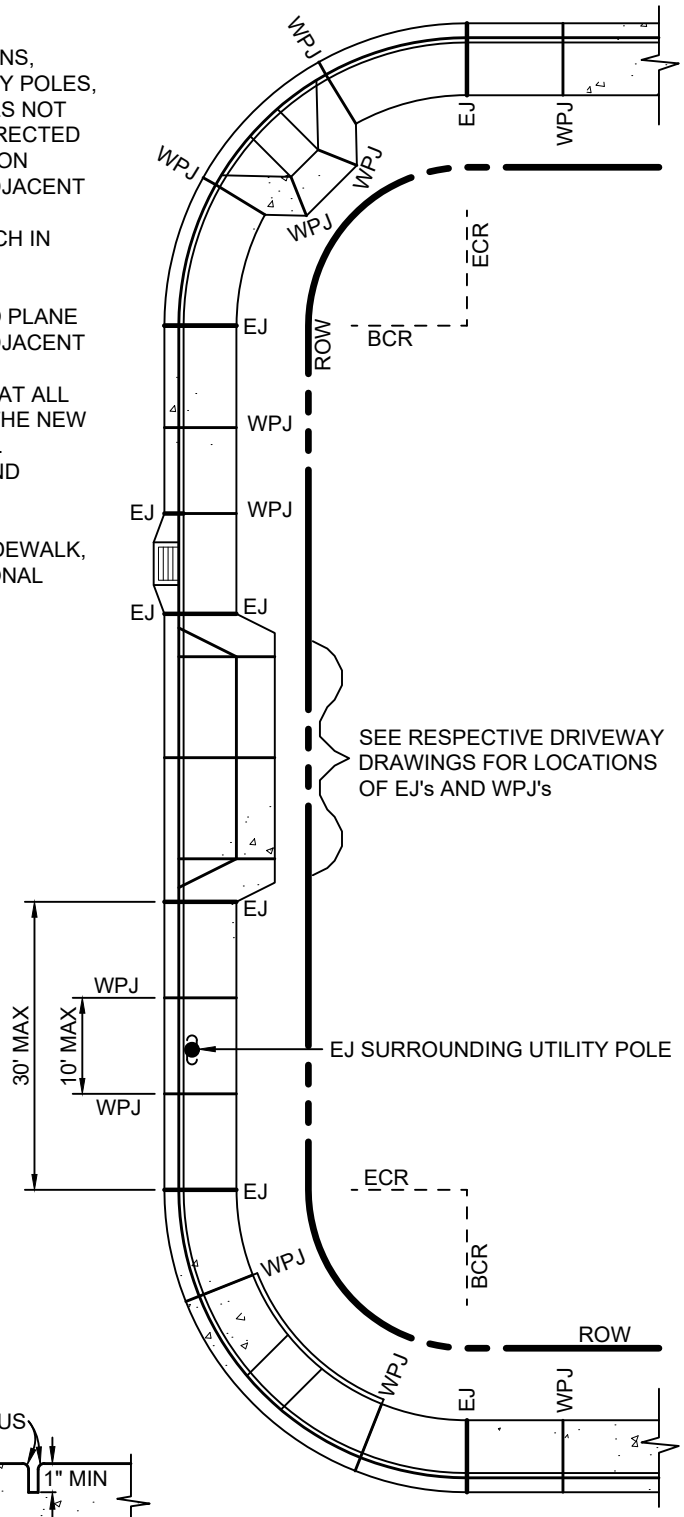

REFER TO DRAWING R-4 FOR REPAIR OF EXISTING SIDEWALKS

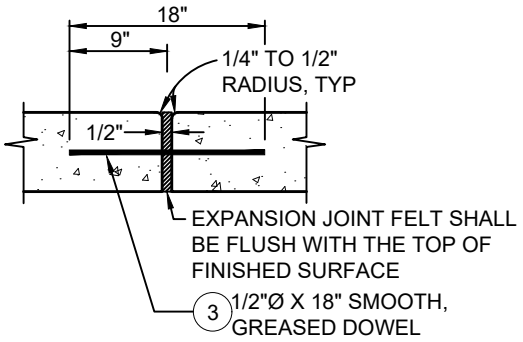

EXPANSION JOINT 1

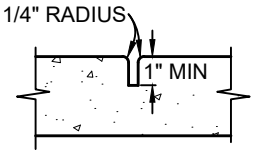

WEAKENED PLANE JOINT 2

DEPARTMENT OF PUBLIC WORKS - STANDARD DRAWINGS

CONCRETE FLATWORK
EXPANSION & CONTROL JOINTS

Issued: August 2022	Scale: 1"=20'
Revised:	Revision No:
Drawing No: C-1	

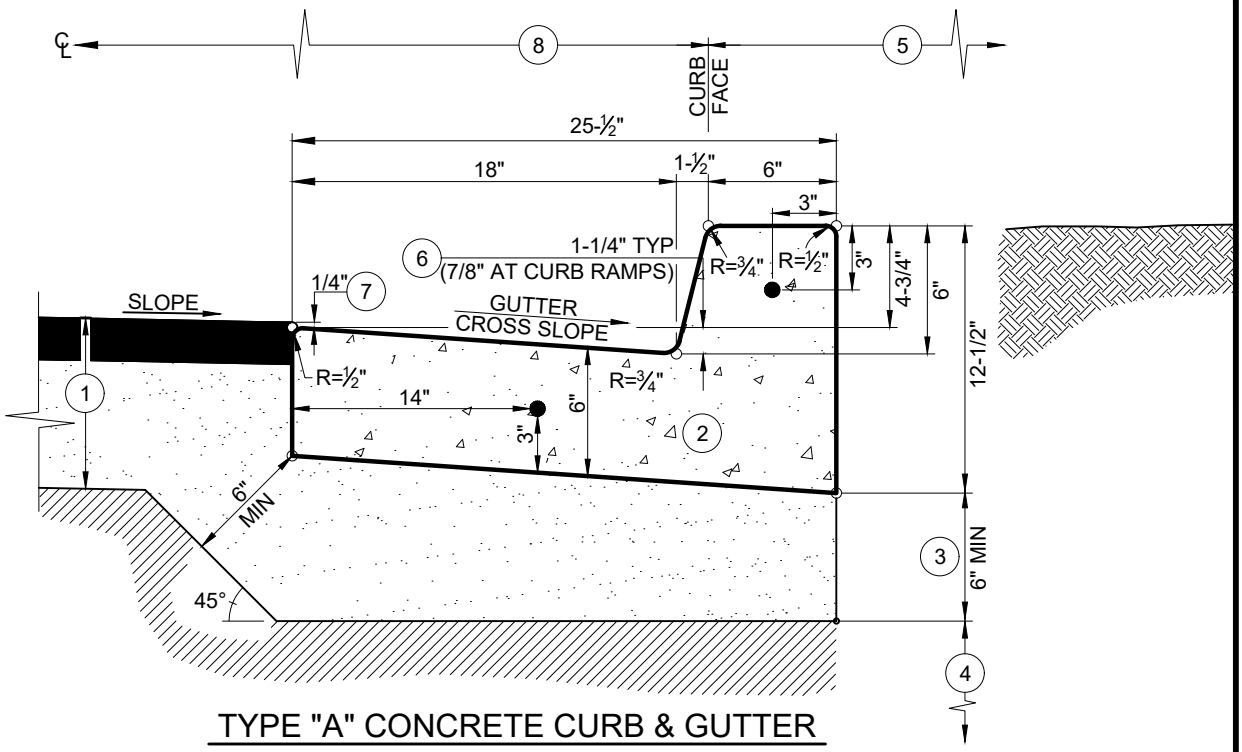

TYPE "A" CONCRETE CURB & GUTTER

NOTES:

1. ROADWAY STRUCTURAL SECTION PER PLAN OR AS EXISTING.
2. CONCRETE CURB SHALL CONFORM TO STATE STANDARD SPECIFICATIONS, 520 LBS CEMENTITIOUS MATERIAL PER CUBIC YARD [5-1/2 SACK]. EXTRUDED CURB SHALL CONFORM TO STATE STANDARD SPECIFICATIONS. CONCRETE CURING SHALL BE BY PIGMENTED CURING COMPOUND METHOD USING WHITE PIGMENT TYPE.
3. 6" MINIMUM CLASS II AGGREGATE BASE TO 95% RELATIVE COMPACTION OR MATCH BASE THICKNESS REQUIREMENT FOR NEW OR EXISTING ROAD SECTION, WHICHEVER IS GREATEST.
4. 12" MINIMUM SUBGRADE TO 95% RELATIVE COMPACTION.
5. SUBGRADE AND AGGREGATE BASE COMPACTION REQUIREMENTS SHALL EXTEND TO THE BACK OF CURB OR TO THE BACK OF ATTACHED SIDEWALK (WHICHEVER CONDITION IS APPLICABLE).
6. GUTTER CROSS SLOPE SHALL NOT EXCEED 5.0% ACROSS GUTTER IN FRONT OF DETECTABLE WARNING AND WITHIN 24" OF CURB RAMP. GUTTER LONGITUDINAL SLOPE SHALL NOT EXCEED 2.0%. REFER TO DETAIL BELOW.
7. THE ROADWAY FINISHED SURFACE SHALL BE 1/4" ABOVE THE GUTTER LIP.
8. PAVEMENT WIDTH MEASURED FROM ROAD CENTERLINE TO THIS POINT.
9. 1/2"Ø x 18" LONG GREASED SMOOTH DOWELS (●) SHALL BE CONSTRUCTED AT ALL EXPANSION JOINTS AND CONSTRUCTION JOINTS, REFER TO STANDARD DRAWING C-1.
10. EXPANSION JOINTS SHALL BE CONSTRUCTED AT 30-FEET MAXIMUM INTERVALS, AT ENDS OF ALL CURB RETURNS, AND EACH SIDE OF DRIVEWAY DEPRESSIONS PER STANDARD DRAWING C-1. THE INTERVALS BETWEEN EXPANSION JOINTS SHALL VARY TO ALLOW MATCHING OF JOINTS ADJACENT EXISTING IMPROVEMENTS WHEN APPLICABLE.
11. WEAKENED PLANE JOINTS (WPJ) SHALL BE CONSTRUCTED AT 10-FEET MAXIMUM INTERVALS PER STANDARD DRAWING C-1. THE INTERVALS BETWEEN EXPANSION JOINTS SHALL VARY TO ALLOW MATCHING OF JOINTS TO ADJACENT EXISTING IMPROVEMENTS WHEN APPLICABLE.
12. UNDER NO CIRCUMSTANCES SHALL UTILITY LIDS AND CONCRETE COLLARS BE LOCATED WITHIN THE CURB & GUTTER.

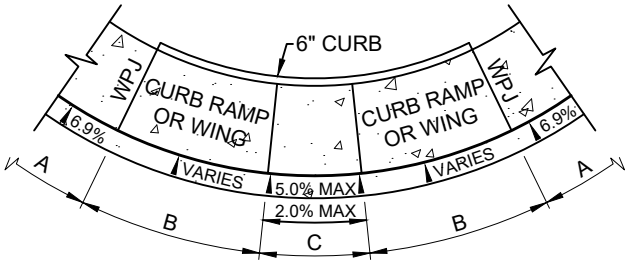

NOTES:

A. GUTTER CROSS SLOPE = 1-1/4" IN 18" = 6.9%
B. GUTTER CROSS SLOPE TRANSITION ZONE (VARIES)
C. GUTTER CROSS SLOPE = 7/8" IN 18" = 4.9% (5.0% MAX)
LONGITUDINAL SLOPE = 2.0% MAX

TYPICAL GUTTER TRANSITION AT CURB RAMP

DEPARTMENT OF PUBLIC WORKS - STANDARD DRAWINGS

CONCRETE FLATWORK

TYPE "A" CURB & GUTTER

Issued:	Scale:
August 2022	NTS
Revised:	Revision No:
Drawing No:	C-2

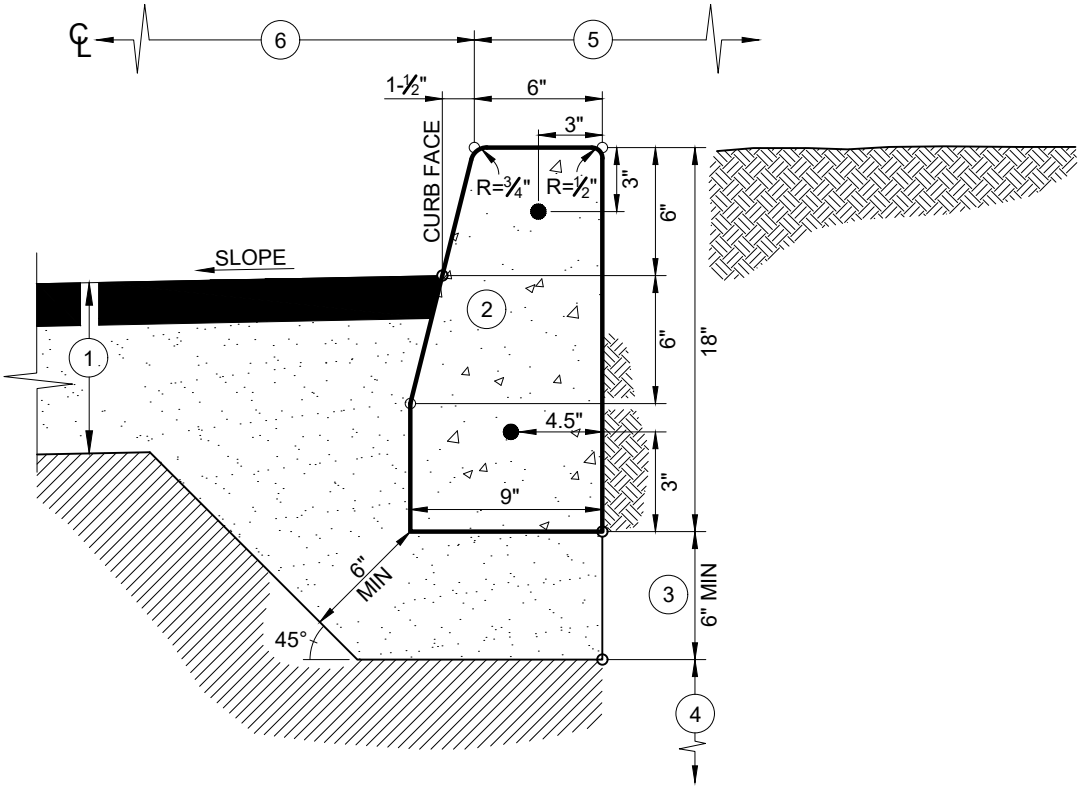

TYPE "C" CONCRETE CURB

NOTES:

1. ROADWAY STRUCTURAL SECTION PER PLAN OR AS EXISTING.
2. CONCRETE CURB SHALL CONFORM TO STATE STANDARD SPECIFICATIONS, 520 LBS CEMENTITIOUS MATERIAL PER CUBIC YARD [5-1/2 SACK]. EXTRUDED CURB SHALL CONFORM TO STATE SPECIFICATIONS. CONCRETE CURING SHALL BE BY PIGMENTED CURING COMPOUND METHOD USING WHITE PIGMENT TYPE.
3. 6" MINIMUM CLASS II AGGREGATE BASE TO 95% RELATIVE COMPACTION OR MATCH BASE THICKNESS REQUIREMENT FOR NEW OR EXISTING ROAD SECTION, WHICHEVER IS GREATEST.
4. 12" MINIMUM SUBGRADE TO 95% RELATIVE COMPACTION.
5. SUBGRADE AND AGGREGATE BASE COMPACTION REQUIREMENTS SHALL EXTEND TO THE BACK OF CURB OR TO THE BACK OF ATTACHED SIDEWALK (WHICHEVER CONDITION IS APPLICABLE).
6. PAVEMENT WIDTH MEASURED FROM ROAD CENTERLINE TO THIS POINT.
7. 1/2"Ø x 18" LONG GREASED SMOOTH DOWELS (●) SHALL BE CONSTRUCTED AT ALL EXPANSION JOINTS PER STANDARD DRAWING C-1.
8. EXPANSION JOINTS SHALL BE CONSTRUCTED AT 30-FEET MAXIMUM INTERVALS, AT ENDS OF ALL CURB RETURNS, AND EACH SIDE OF DRIVEWAY DEPRESSIONS. THE INTERVALS BETWEEN EXPANSION JOINTS SHALL VARY TO ALLOW MATCHING OF JOINTS ADJACENT EXISTING IMPROVEMENTS WHEN APPLICABLE PER STANDARD DRAWING C-1.
9. WEAKENED PLANE JOINTS SHALL BE CONSTRUCTED AT 10-FEET MAXIMUM INTERVALS PER STANDARD DRAWING C-1. THE INTERVALS BETWEEN EXPANSION JOINTS SHALL VARY TO ALLOW MATCHING OF JOINTS TO ADJACENT EXISTING IMPROVEMENTS WHEN APPLICABLE.
10. UNDER NO CIRCUMSTANCES SHALL UTILITY LIDS AND CONCRETE COLLARS BE LOCATED WITHIN THE TOP OF CURB.

DEPARTMENT OF PUBLIC WORKS - STANDARD DRAWINGS

CONCRETE FLATWORK

TYPE "C" CURB

Issued:	Scale:
August 2022	NTS
Revised:	Revision No:
Drawing No:	C-3

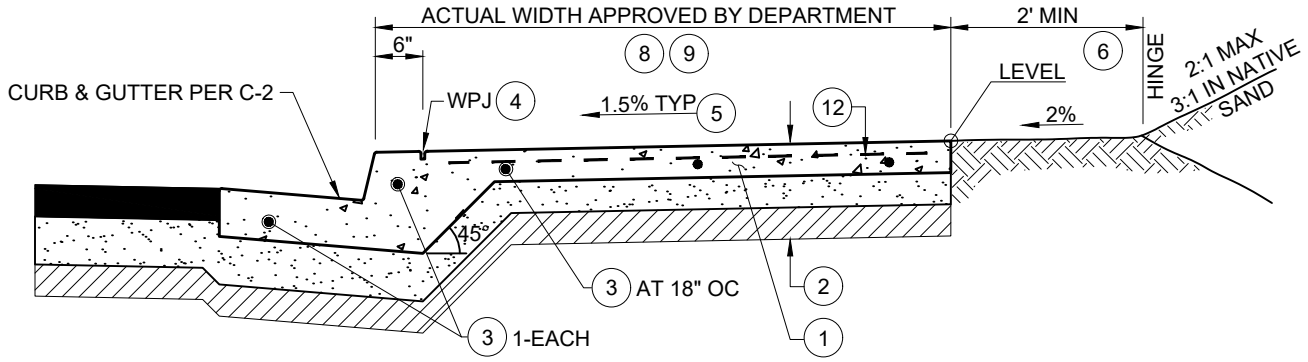

INTEGRAL SIDEWALK (MONOLITHIC)

(SEE OPTIONAL JOINT DETAIL)

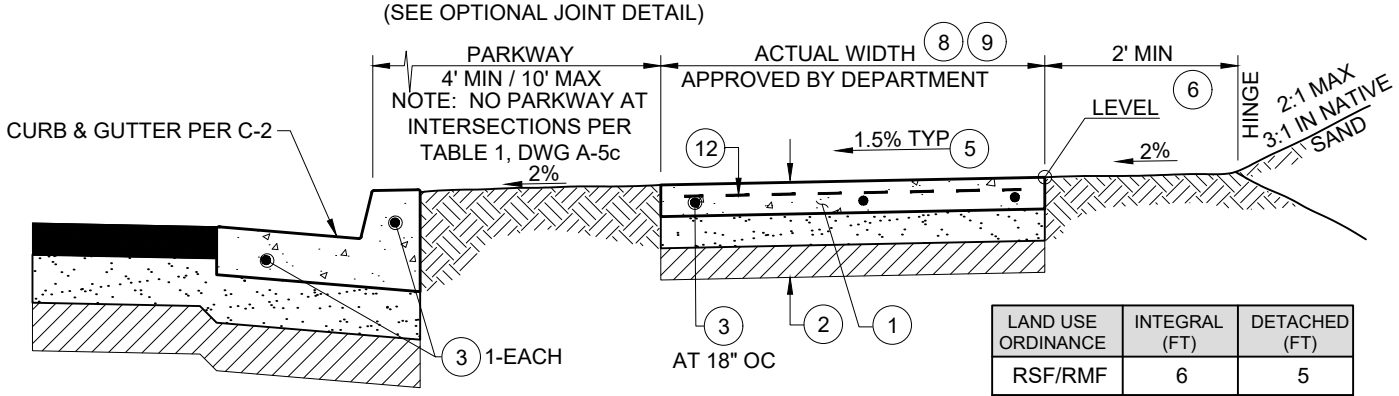

DETACHED OR MEANDERING SIDEWALK

LAND USE ORDINANCE	INTEGRAL (FT)	DETACHED (FT)
RSF/RMF	6	5
CR	10	6
CS	6	5
OP	8	5
IND	6	5

SIDEWALK WIDTH TABLE

NOTES:

1. CONCRETE SIDEWALK SHALL CONFORM TO STATE STANDARD SPECIFICATIONS, MINOR (520 LBS CEMENTITIOUS MATERIAL PER CUBIC YARD [5-1/2 SACK]). CONCRETE CURING SHALL BE BY PIGMENTED CURING COMPOUND METHOD USING WHITE PIGMENT TYPE.
2. TYPICAL SECTION SHALL BE:
   - 4-INCH MIN PCC (6-INCH OR 8-INCH WHEN WITHIN A DRIVEWAY), OVER
   - 6-INCH MIN CLASS II AGGREGATE BASE TO 95% RELATIVE COMPACTION, OVER
   - 12-INCH MIN SUBGRADE TO 95% RELATIVE COMPACTION

   IF THE R-VALUE OF THE NATIVE MATERIAL IS 55 OR GREATER THEN THE 6-INCH OF AGGREGATE BASE MAY BE SUBSTITUTED WITH COMPACTED NATIVE MATERIAL.
3. EXPANSION JOINTS (EJ) SHALL BE CONSTRUCTED AT LONGITUDINAL INTERVALS NOT EXCEEDING 30-FEET. 1/2"Ø x 18" SMOOTH, GREASED DOWELS SHALL BE PLACED IN THE EJ, ONE IN CURB FACE, ONE IN GUTTER, AND AT 18-INCHES ON CENTER IN SIDEWALKS PER STANDARD DRAWING C-1.
4. WEAKENED PLANE JOINTS (WPJ) SHALL BE CONSTRUCTED BETWEEN EXPANSION JOINTS AT LONGITUDINAL INTERVALS NOT EXCEEDING 10-FEET, AND AT 6-INCHES BEHIND THE CURB FACE FOR ATTACHED SIDEWALKS PER STANDARD DRAWING C-1.
5. THE CROSS SLOPE OF THE SIDEWALK SHALL NOT EXCEED 2.0%, 1.5% IS RECOMMENDED.
6. THE 2-FEET BENCH IS NOT REQUIRED FOR ADJOINING SLOPES OF 5h:1v OR FLATTER.
7. ALTHOUGH THE PROJECT CONDITIONS OF APPROVAL OR THE AREA SPECIFIC PLAN MAY REQUIRE AN ALTERNATIVE SIDEWALK CONFIGURATION, THE CONSTRUCTION SPECIFICATIONS OF THIS STANDARD SHALL APPLY.
8. THE SIDEWALK SHALL BE WIDENED WHERE REQUIRED TO ALLOW FOR A 4-FEET CLEAR PASSAGE AROUND ALL ABOVE GRADE OBSTACLES LOCATED WITHIN THE SIDEWALK.
9. WATER PURVEYOR METER BOXES ARE ALLOWED WITHIN THE SIDEWALK PROVIDED THAT ALL LIDS AND LIDS WITH A.M.R. SYSTEMS ARE SET FLUSH WITH THE SIDEWALK.
10. ALL UTILITY VAULTS AND LIDS MUST BE LOCATED OUTSIDE OF THE SIDEWALK OR HAVE PRIOR DEPARTMENT APPROVAL FOR LOCATION WITHIN THE SIDEWALK. UTILITY LIDS WITHIN THE SIDEWALK SHALL HAVE A NON-SLIP SURFACE.
11. SEE DRAWING M-5 FOR TREE PLANTING REQUIREMENTS WITHIN RIGHT-OF-WAY.
12. PROVIDE REBAR WHEN REQUIRED BY DEPARTMENT.

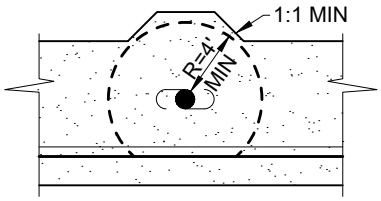

SIDEWALK SHALL BE WIDENED BEHIND ALL ABOVE GRADE OBSTACLES TO PROVIDE A 4-FEET MINIMUM CLEARANCE.

8 SIDEWALK WIDENING DETAIL

NTS

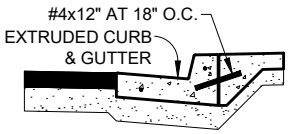

WHEN EXTRUDED CURB & GUTTER IS USED AND SIDEWALK PORTION IS NOT PLACED WITHIN 1-HOUR THEN REBAR SHALL BE PLACED PER THIS JOINT DETAIL.

TYPICAL JOINT DETAIL

NTS

DEPARTMENT OF PUBLIC WORKS - STANDARD DRAWINGS

CONCRETE FLATWORK

SIDEWALKS

Issued: August 2022	Scale: 1"=2'
Revised:	Revision No:
Drawing No: C-4	

NOTES:

1. ALL CURB RAMPS FOR NEW CONSTRUCTION, RETROFIT, AND REPLACEMENT SHALL CONFORM TO STATE STANDARD SPECIFICATIONS.
2. NEW SIDEWALKS AND PATHS SHALL BE PROVIDED WITH CURB RAMPS AT ALL INTERSECTIONS.
3. NO UTILITY APPURTENANCES OR LIDS SHALL BE LOCATED WITHIN THE CURB RAMP AND WINGS.
4. MID-BLOCK CURB RAMPS ARE DISCOURAGED AND SHALL REQUIRE PRIOR DEPARTMENT APPROVAL.
5. THE PROJECT ENGINEER SHALL DETAIL EACH CURB RAMP ON THE PLANS. MINIMUM DETAIL REQUIREMENTS SHALL INCLUDE DIMENSIONS, SLOPES, AND SPOT ELEVATIONS.
6. THE DEPARTMENT MAY GRANT EXCEPTIONS TO THESE STANDARDS ON AN INDIVIDUAL BASIS. THE DEPARTMENT ADA COORDINATOR SHALL REVIEW AND PROVIDE PRIOR APPROVAL OF ALL EXCEPTIONS.
7. MULTIPLE RAMPS SHALL BE REQUIRED AT ALL BULB-OUTS AND SHALL BE ALIGNED WITH APPROACH SIDEWALK.

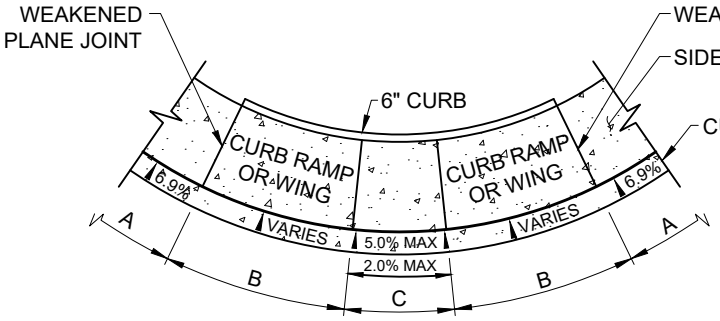

NOTES:

A. GUTTER CROSS SLOPE = 1-1/4" IN 18" = 6.9%
B. GUTTER CROSS SLOPE TRANSITION ZONE (VARIES)
C. GUTTER CROSS SLOPE = 7/8" IN 18" = 4.9% (5.0% MAX)
GUTTER LONGITUDINAL SLOPE = 2.0% MAX

TYPICAL GUTTER TRANSITION AT CURB RAMP

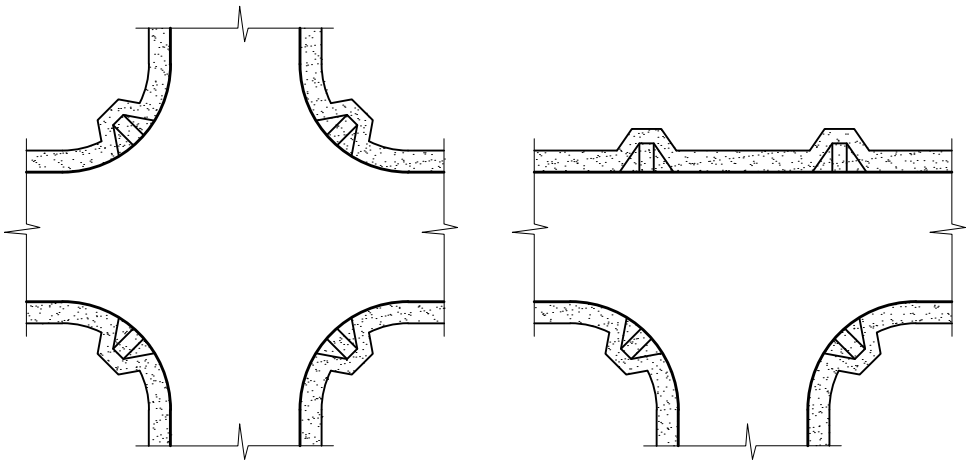

TYPICAL CURB RAMP PLACEMENT

DEPARTMENT OF PUBLIC WORKS - STANDARD DRAWINGS

CONCRETE FLATWORK

CURB RAMPS

Issued: August 2022	Scale: NTS
Revised:	Revision No:
Drawing No:	C-5

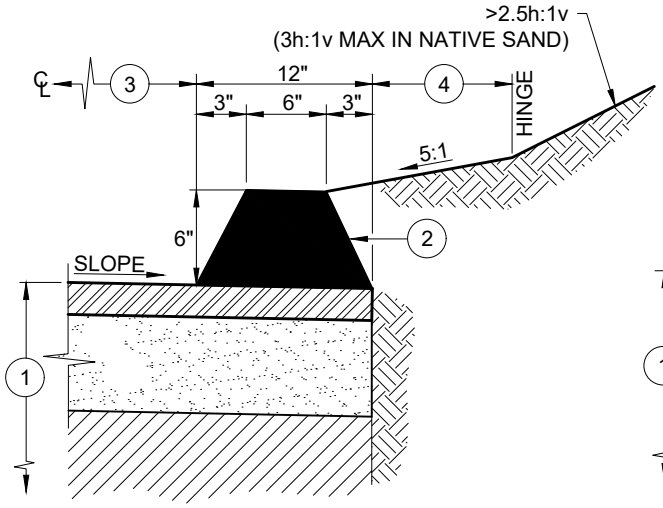

TYPE "A" HMA DIKE

FOR USE IN CUT CONDITIONS > 2.5:1

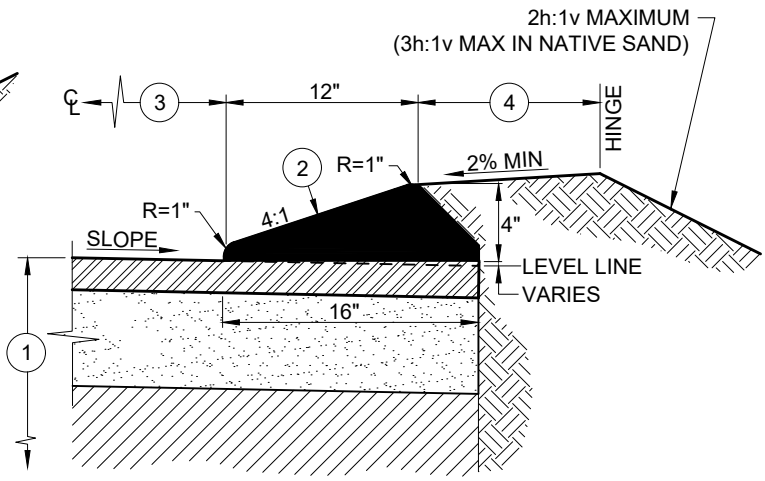

TYPE "E" MOUNTABLE HMA DIKE

FOR USE IN FLAT & FILL CONDITIONS

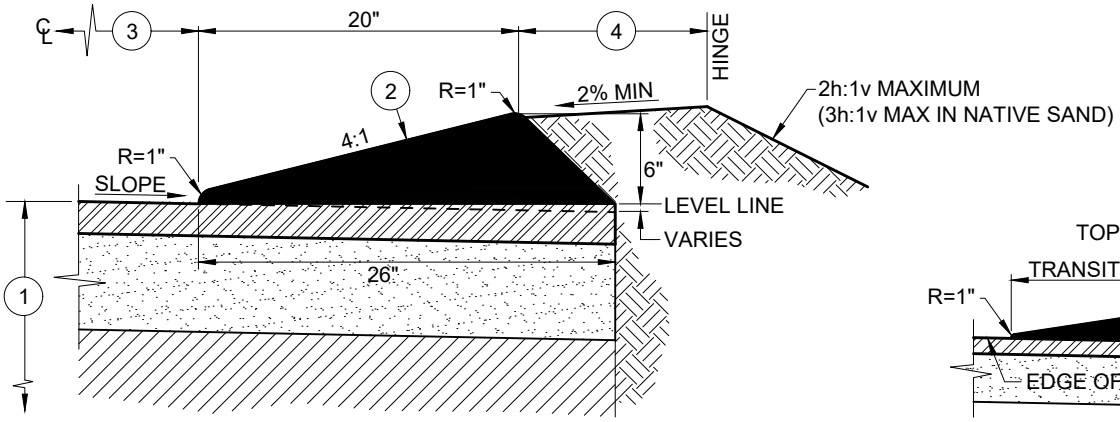

TYPE "D" MOUNTABLE HMA DIKE

FOR USE IN FLAT & FILL CONDITIONS (OPTIONAL)

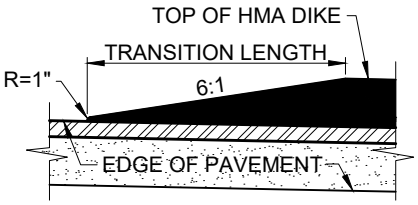

DIKE END TRANSITION 5

NOTES:

1. ROADWAY STRUCTURAL SECTION THICKNESS PER PLAN.
2. HOT MIX ASPHALT (HMA) DIKE SHALL BE REQUIRED PER THE DESIGN STANDARDS (REFER TO A-1 SERIES STANDARD DRAWINGS). USE PG 70-10 ASPHALT BINDER FOR ALL HMA DIKES.
3. ROADWAY TRAVEL PLUS SHOULDER WIDTH MEASURED FROM ROAD CENTERLINE TO THIS POINT.
4. REFER TO A-1 SERIES STANDARD DRAWINGS FOR MINIMUM DISTANCES TO HINGE POINT.
5. A 6h:1v DIKE HEIGHT TAPER SHALL BE PROVIDED AT EACH TERMINUS OF THE HMA DIKE.
6. HMA DIKE MAY BE REQUIRED BY THE DEPARTMENT WHERE NEEDED TO CONTROL DRAINAGE OR EROSION ON ROADWAYS HAVING LONGITUDINAL GRADES OF 3% OR GREATER. TYPE "D" OR "E" HMA DIKE SHALL NORMALLY BE USED IN ALL APPLICATIONS AND SHALL BE REQUIRED IN CONDITIONS WHERE THE ROADWAY IS ABOVE OR LEVEL WITH THE ADJACENT GRADE. TYPE "A" HMA DIKE SHALL BE USED ADJACENT TO CUT SLOPES STEEPER THAN 2.5:1 AND WHEN THE ROADWAY IS BELOW THE ADJACENT GRADE.
7. PRIOR TO PROJECT ACCEPTANCE, ALL DAMAGED HMA DIKE SHALL BE REMOVED AND REPLACED AND A FOG SEAL SHALL BE APPLIED TO BOTH THE REPLACED HMA DIKE AND TO THE REMAINING UNDAMAGED HMA DIKE TO THE LIMITS DETERMINED BY THE DEPARTMENT.

DEPARTMENT OF PUBLIC WORKS - STANDARD DRAWINGS

HOT MIX ASPHALT (HMA)
DIKES

Issued:	Scale:
August 2022	1"=1'
Revised:	Revision No:
Drawing No:	C-6

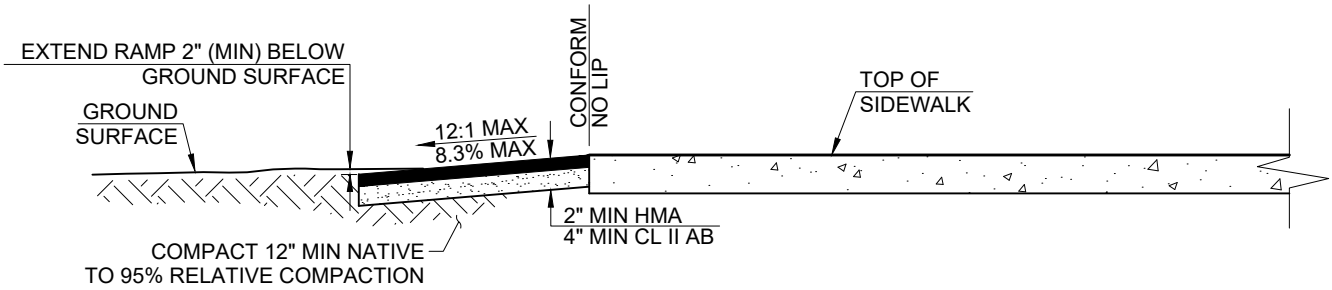

SECTION A-A: HMA RAMP

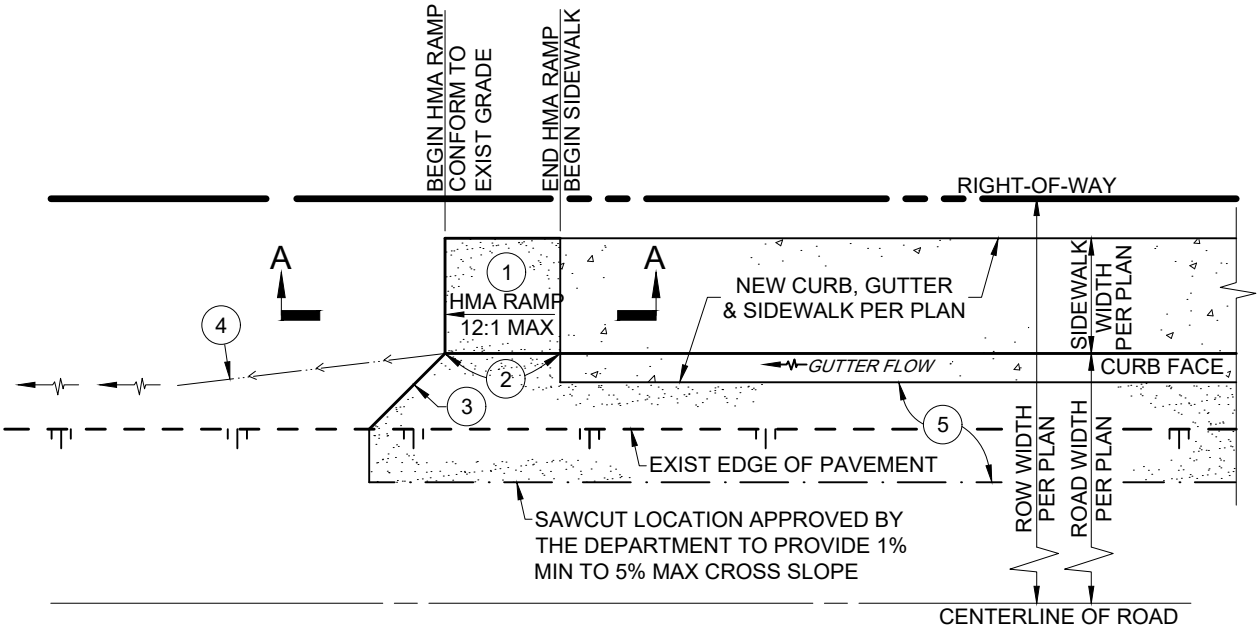

PLAN VIEW

NOTES:
FOR USE AT THE END OF NEW SIDEWALK TO PROVIDE A SMOOTH TRANSITION FROM EDGE OF NEW SIDEWALK TO EXISTING GRADE. IF A SMOOTH TRANSITION CANNOT BE ACHIEVED THEN THE DEPARTMENT MAY REQUIRE A SIDEWALK BARRICADE BE CONSTRUCTED PER DRAWING M-3.

1. CONSTRUCT NEW HOT MIX ASPHALT (HMA) RAMP. RAMP SHALL BE 2-INCHES MINIMUM HMA TO 95% RELATIVE COMPACTION, OVER 4-INCHES MINIMUM CLASS II AGGREGATE BASE TO 95% RELATIVE COMPACTION, OVER COMPACTED NATIVE MATERIAL. SLOPE OF RAMP SHALL NOT EXCEED 12:1 (8.33%), RECOMMENDED SLOPE OF 8% MAXIMUM.
2. TYPE "A" HMA DIKE PER DRAWING C-6 TAPERED FROM 0-INCHES (FLUSH) TO 6-INCHES TALL TO MATCH EDGE OF NEW CONCRETE CURB.
3. CONSTRUCT NEW EDGE OF PAVEMENT TAPER AT 1:1 MINIMUM IN RESIDENTIAL (5:1 MINIMUM IN COMMERCIAL) AREAS TO JOIN EXISTING EDGE OF PAVEMENT (THE DEPARTMENT MAY REQUIRE A LONGER TAPER LENGTH).
4. GRADE AND RECOMPACT EXISTING SHOULDER TO PROVIDE A POSITIVE DRAINAGE CONNECTION BETWEEN NEW GUTTER FLOWLINE TO EXISTING SWALE PATH.
5. NEW ROADWAY WIDENING, STRUCTURAL SECTION PER PLANS.

DEPARTMENT OF PUBLIC WORKS - STANDARD DRAWINGS

HOT MIX ASPHALT (HMA)
SIDEWALK TERMINUS RAMP

Issued: August 2022	Scale: 1"=1'
Revised:	Revision No:
Drawing No: C-7	

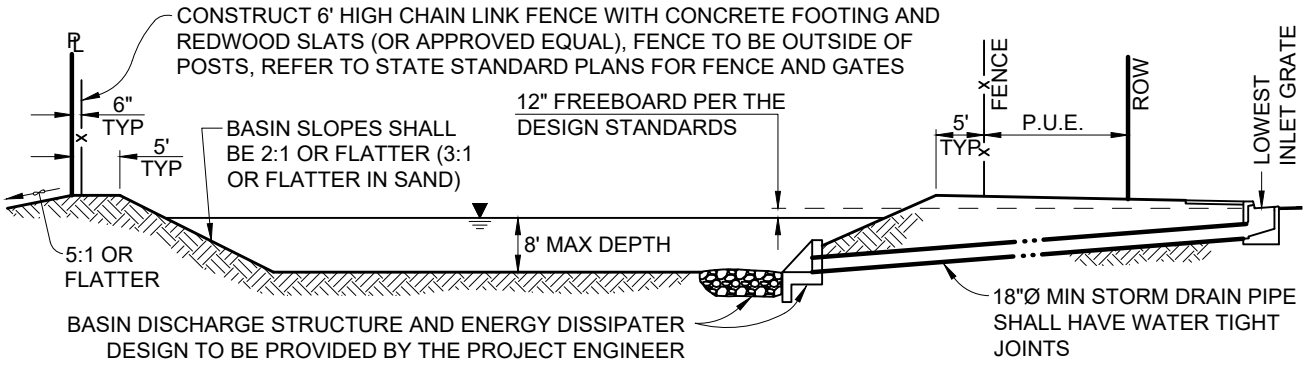

SECTION A-A

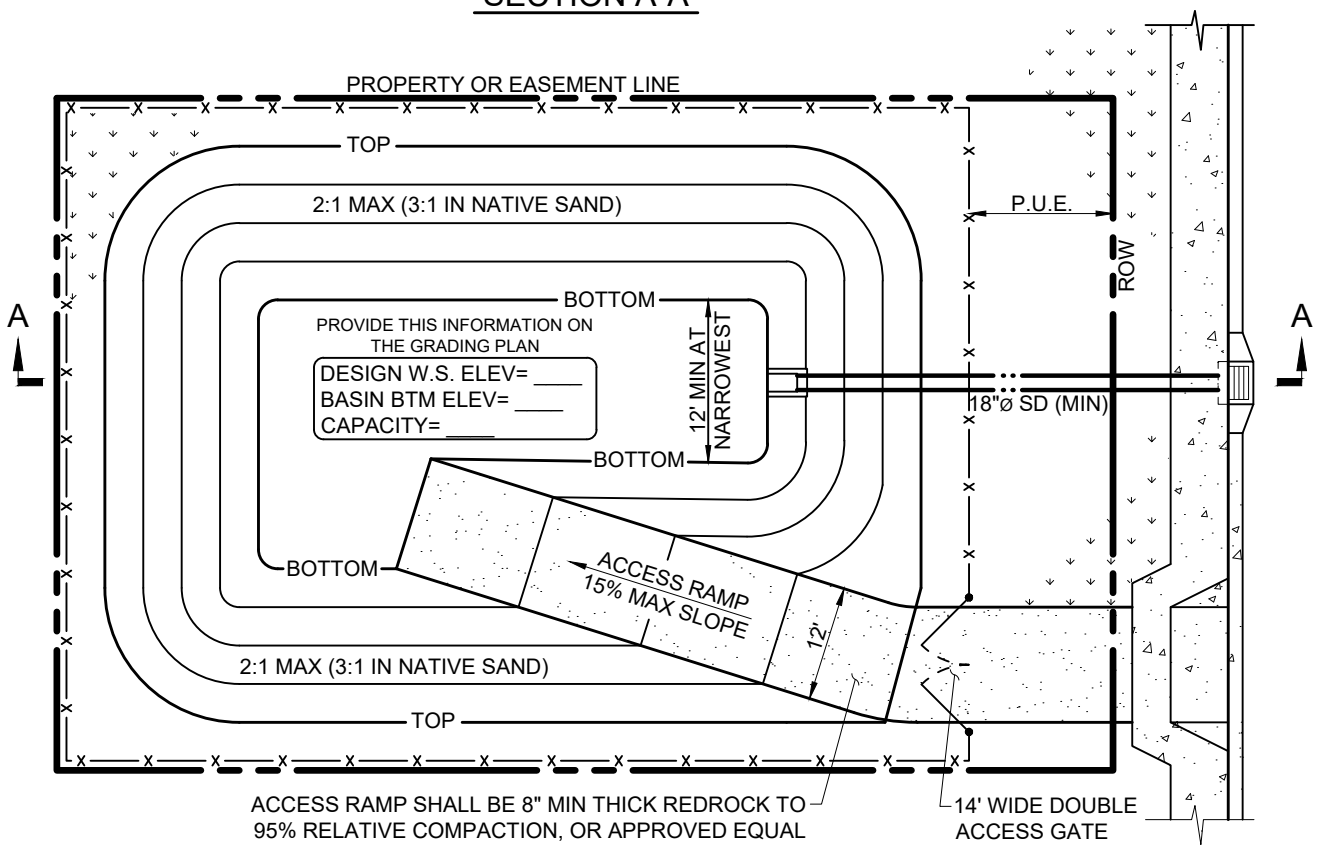

PLAN VIEW

NOTES:

1. DEEP RETENTION BASIN SHOWN. WHERE DEEP DETENTION BASINS ARE PROPOSED THEY SHALL MEET THE SAME REQUIREMENTS OF THIS STANDARD.
2. BASINS MUST FULLY DRAIN WITHIN SEVEN (7) DAYS OR AN INFILTRATION ENHANCEMENT SYSTEM SHALL BE REQUIRED. THE DEPARTMENT MAY ALSO REQUIRE INFILTRATION TESTS AND CERTIFICATION FROM THE PROJECT ENGINEER.
3. A BASIN OVERFLOW STRUCTURE TO ACCOMMODATE UP TO A 100-YEAR STORM EVENT SHALL BE DESIGNED WHICH DISCHARGES FLOWS TO THE PUBLIC RIGHT-OF-WAY OR A DEFINED WATER COURSE IN A NON-EROSIVE MANNER.
4. THE OVERLAND ESCAPE PATH (NOTE 3) SHALL BE IDENTIFIED ON THE PLANS AND SHOWN TO PROTECT DOWNSTREAM PROPERTIES IN THE EVENT OF BASIN SPILL OR FAILURE.
5. ADDITIONAL BASIN AND BASIN LANDSCAPING REQUIREMENTS MAY BE IMPOSED AS PART OF THE DESIGN STANDARDS.
6. BASIN LANDSCAPING AND EROSION CONTROL SHALL BE SUBSTANTIALLY ESTABLISHED PRIOR TO PROJECT ACCEPTANCE.

DEPARTMENT OF PUBLIC WORKS - STANDARD DRAWINGS

DRAINAGE & FLOOD CONTROL

DEEP BASIN

Issued: August 2022	Scale: NTS
Revised:	Revision No:
Drawing No: D-1	

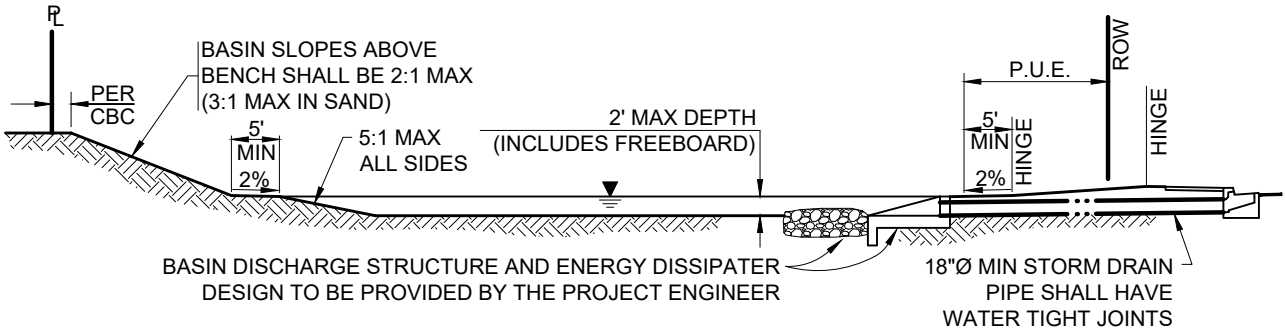

SECTION A-A

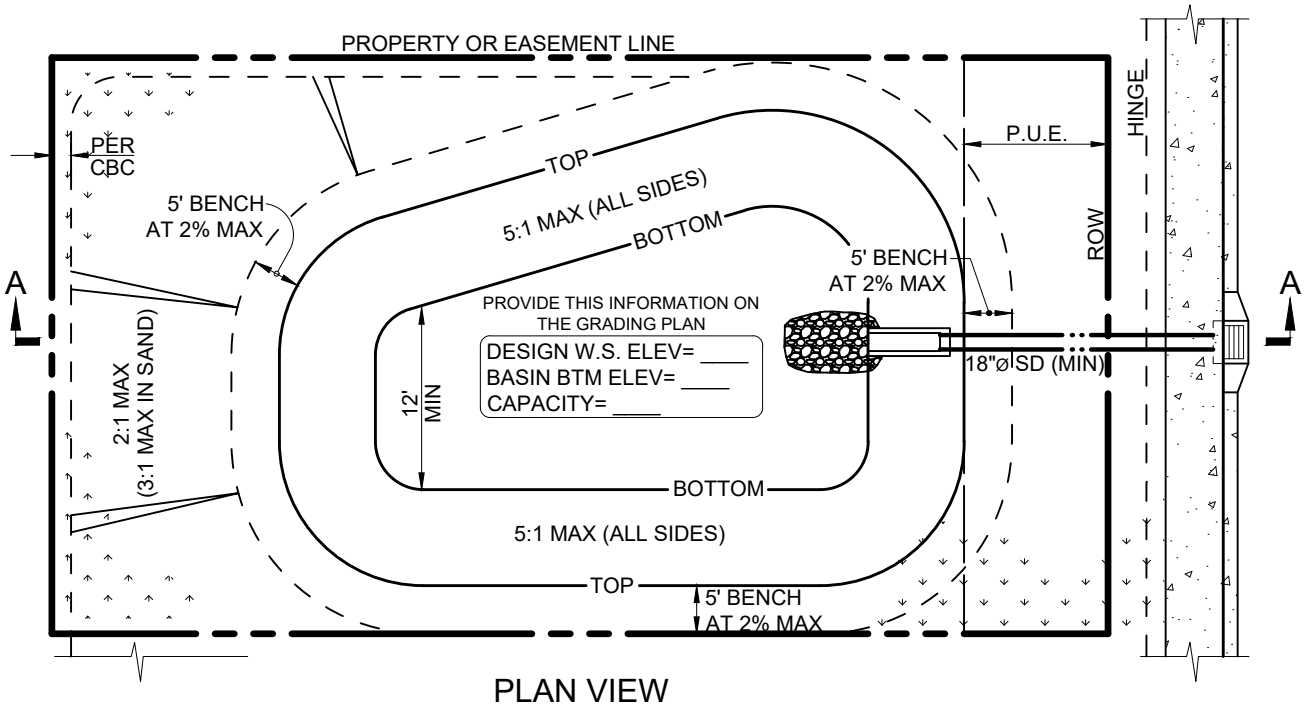

PLAN VIEW

NOTES:

1. SHALLOW RETENTION BASIN SHOWN. WHERE SHALLOW DETENTION BASINS ARE PROPOSED THEY SHALL MEET THE SAME REQUIREMENTS OF THIS STANDARD.
2. BASINS MUST FULLY DRAIN WITHIN SEVEN (7) DAYS OR AN INFILTRATION ENHANCEMENT SYSTEM SHALL BE REQUIRED. THE DEPARTMENT MAY ALSO REQUIRE INFILTRATION TESTS AND CERTIFICATION FROM THE PROJECT ENGINEER.
3. BASIN OVERFLOW SHALL BE DESIGNED WHICH DISCHARGES FLOWS TO THE PUBLIC RIGHT-OF-WAY OR A DEFINED WATER COURSE IN A NON-EROSIVE MANNER.
4. THE OVERLAND ESCAPE PATH SHALL BE IDENTIFIED ON THE PLANS AND SHOWN TO PROTECT DOWNSTREAM PROPERTIES IN THE EVENT OF BASIN SPILL OR FAILURE.
5. ADDITIONAL BASIN AND BASIN LANDSCAPING REQUIREMENTS MAY BE IMPOSED AS PART OF THE DESIGN STANDARDS.
6. BASIN LANDSCAPING AND EROSION CONTROL SHALL BE SUBSTANTIALLY ESTABLISHED PRIOR TO PROJECT ACCEPTANCE.

DEPARTMENT OF PUBLIC WORKS - STANDARD DRAWINGS

DRAINAGE & FLOOD CONTROL

SHALLOW BASIN

Issued:	Scale:
August 2022	NTS
Revised:	Revision No:
Drawing No:	D-1a

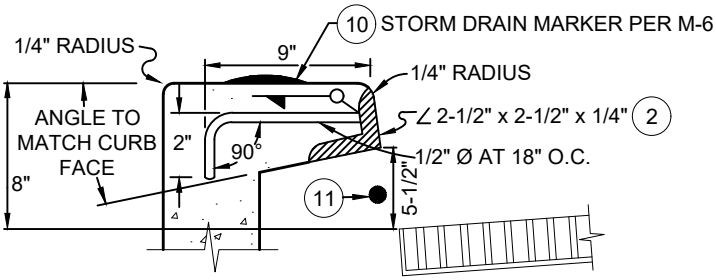

FACE ANGLE ANCHOR

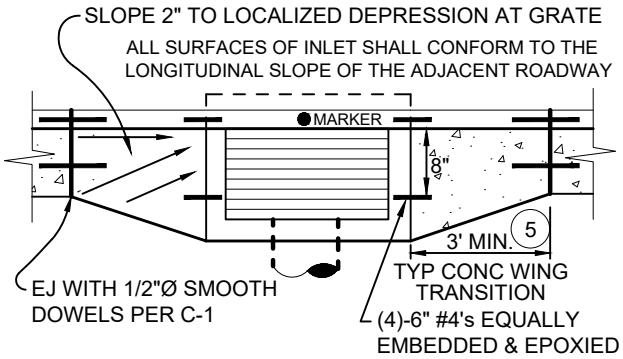

WING TRANSITION PLAN

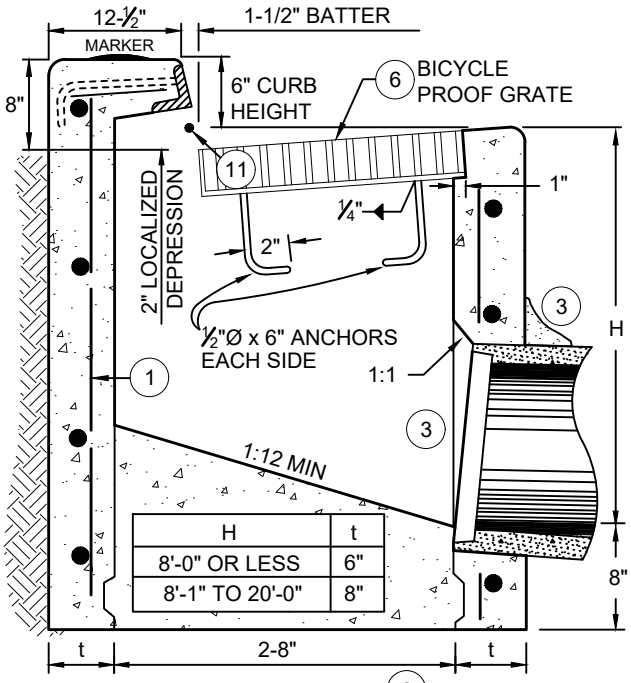

H	t
8'-0" OR LESS	6"
8'-1" TO 20'-0"	8"

SECTION A-A 8

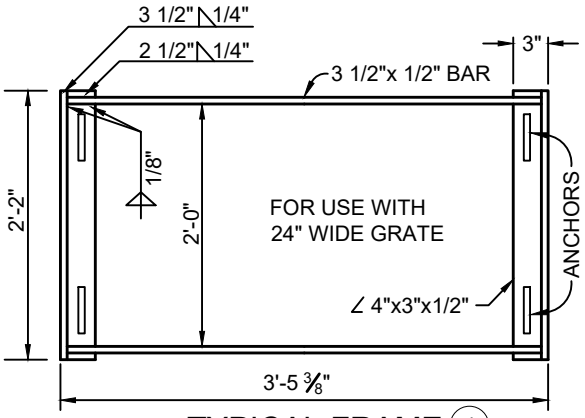

TYPICAL FRAME 4

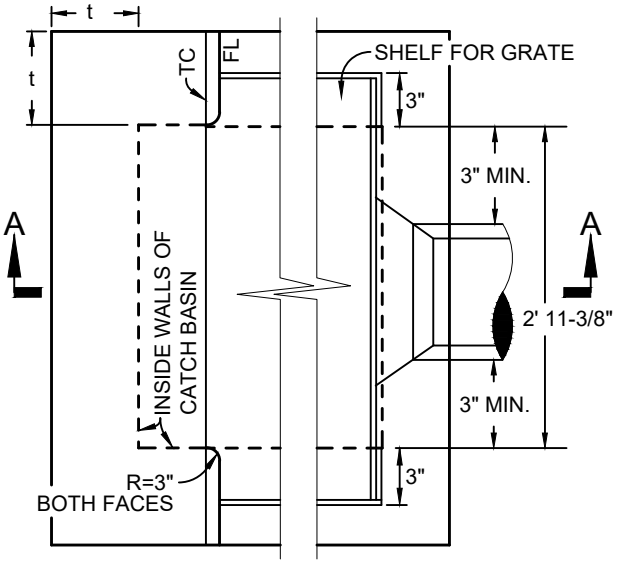

PLAN

NOTES:

1. REINFORCING STEEL SHALL BE #4 BARS AT 18" O.C. PLACED 1-1/2" CLEAR TO INSIDE OF BOX UNLESS OTHERWISE NOTED. BASIN FLOORS SHALL HAVE WOOD FLOAT FINISH AND A MINIMUM SLOPE OF 12h:1v FROM ALL DIRECTIONS TOWARDS OUTLET PIPE. CONCRETE SHALL BE 565 LBS/CY CEMENTITIOUS MATERIAL [6 SACK] PER STATE STANDARD SPECIFICATIONS.
2. FACE ANGLE SHALL EXTEND FULL WIDTH OF BOX.
3. SMOOTH GROUT INSIDE AND OUTSIDE OF PIPE JUNCTION TO FORM A WATERTIGHT SEAL.
4. FRAME SHALL BE DIPPED IN COMMERCIAL QUALITY ASPHALTUM PAINT OR GALVANIZED.
5. IN ALL CASES 3' LONG CONCRETE WINGS SHALL BE CONSTRUCTED EITHER SIDE OF THE INLET.
6. GRATE SHALL BE BICYCLE PROOF AND CONFORM TO STATE STANDARD SPECIFICATIONS.
7. THE DEPARTMENT MAY REQUIRE OIL AND/OR SEDIMENTATION CONTROL DEVICES BE PROVIDED.
8. PRECAST INLETS MEETING THESE SAME REQUIREMENTS MAY BE SUBSTITUTED AT THE APPROVAL OF THE DEPARTMENT.
9. THE CATCH BASIN TOP AND GRATE SHALL BE CONSTRUCTED TO MATCH THE LONGITUDINAL SLOPE OF THE ADJACENT ROADWAY.
10. INSTALL STORM DRAIN MARKER PER M-6.
11. PLACE A 3/4" PLAIN ROUND PROTECTION BAR MID-HEIGHT AND HORIZONTALLY ACROSS THE LENGTH OF THE OPENING. BEND BACK 4" MIN. INTO THE INLET WALL ON EACH SIDE.

DEPARTMENT MAY REQUIRE A STAINLESS STEEL FRAME DESIGNED TO ACCEPT A "DrainPac™" STORM DRAIN FILTER INSERT, OR EQUAL.

DEPARTMENT OF PUBLIC WORKS - STANDARD DRAWINGS

DRAINAGE & FLOOD CONTROL

URBAN CATCH BASIN

Issued: August 2022	Scale: NTS
Revised:	Revision No:
Drawing No: D-2	

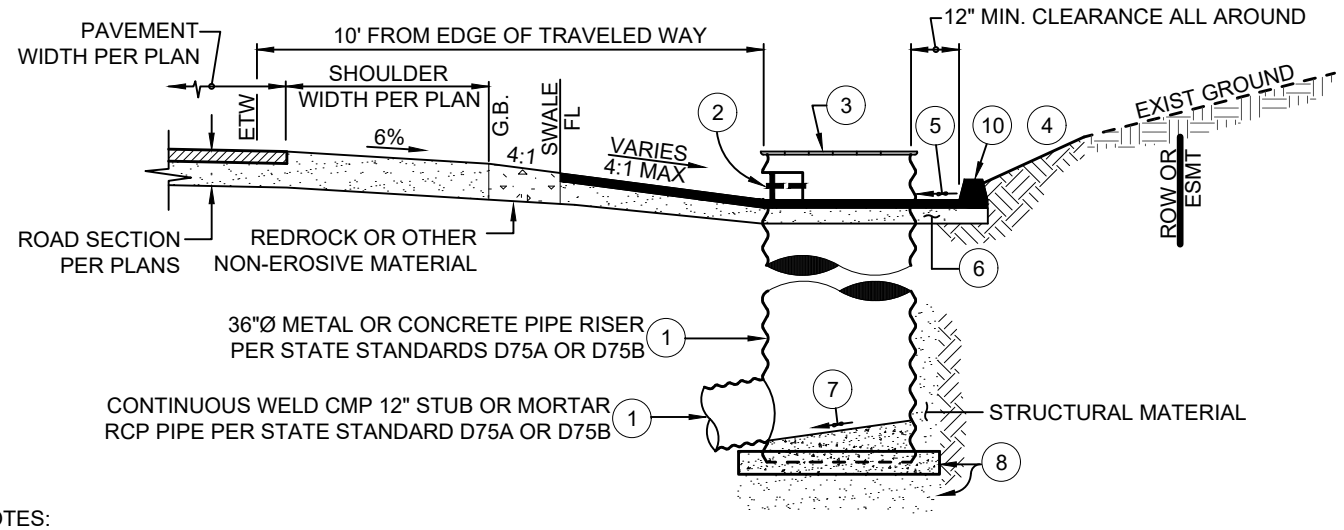

SECTION A-A

NOTES:

1. REFER TO THE STATE STANDARD PLANS D75A OR D75B FOR PIPE RISER DETAILS. THE PROJECT ENGINEER SHALL PROVIDE ALL DESIGN SPECIFICATIONS ON THE PLANS (RISER TYPE, COVER, GRATE, PIPE SIZE, ETC.).
2. CONSTRUCT TRASH RACK PER THE STATE STANDARD PLAN D75C IF DIRECTED BY THE DEPARTMENT.
3. A COVER MAY BE USED WHEN THE RISER IS NOT LOCATED IN SUMP CONDITIONS, OTHERWISE USE TYPE "GMP" OR "GCP" GRATE. PROJECT ENGINEER SHALL PROVIDE HYDRAULIC CALCULATIONS.
4. MINIMUM CUT SLOPE SHALL BE 2 HORIZONTAL:1 VERTICAL (3h:1v IN NATIVE SAND).
5. SLOPE TO DRAIN TOWARDS RISER OPENING.
6. 2-INCH MINIMUM HOT MIX ASPHALT OVER 6-INCH MINIMUM CLASS II AGGREGATE BASE COMPACTED TO 95%.
7. RISER FLOOR SLOPED TO DRAIN AT 4h:1v TOWARDS OUTLET, PROVIDE WOOD FLOAT FINISH.
8. CONCRETE SHALL BE 565 LBS/CY CEMENTITIOUS MATERIAL [6 SACK], OVER 6-INCH MINIMUM CLASS II AGGREGATE BASE TO 95% RELATIVE COMPACTION.
9. MODIFY APPROACH GRADING AS REQUIRED TO PROVIDE SMOOTH FLOWLINE TRANSITION TOWARDS INLET.
10. TYPE "A" HMA DIKE PER DRAWING C-6.
11. REQUIRED ROADSIDE DRAINAGE PER A-1 SERIES DRAWINGS. PROVIDE COMPACTED REDROCK OR OTHER DEPARTMENT APPROVED MATERIAL.
12. ALL EXPOSED STEEL SHALL BE COLD GALVANIZED.
13. A DRAINAGE EASEMENT SHALL BE OFFERED TO THE PUBLIC WHENEVER THE IMPROVEMENTS EXTEND BEYOND THE RIGHT-OF-WAY.
14. MODIFY AS REQUIRED FOR SUMP CONDITIONS.
15. INSTALL STORM DRAIN MARKER PER M-6.

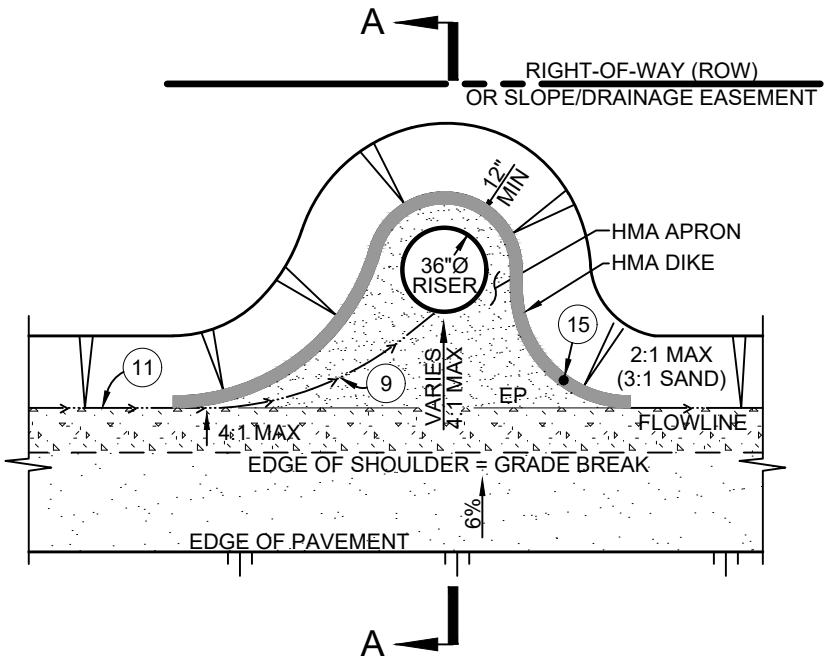

PLAN

REDUCED SCALE

DEPARTMENT OF PUBLIC WORKS - STANDARD DRAWINGS

DRAINAGE & FLOOD CONTROL

RURAL CATCH BASIN-EDGE OF PAVEMENT

Issued: August 2022	Scale: 1"=4'
Revised:	Revision No:
Drawing No: D-2a	

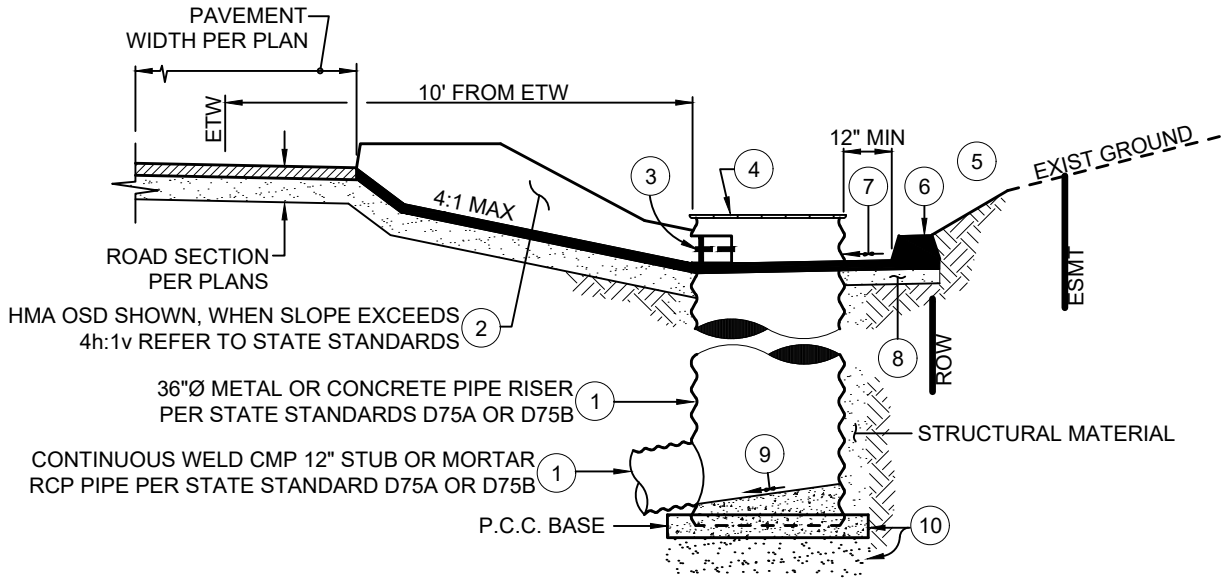

SECTION A-A

NOTES:

1. REFER TO THE STATE STANDARD PLANS D75A OR D75B FOR PIPE RISER DETAILS. THE PROJECT ENGINEER SHALL PROVIDE ALL DESIGN SPECIFICATIONS ON THE PLANS (RISER TYPE, LID, GRATE, PIPE SIZE, ETC).
2. REFER TO THE STATE STANDARD D87D FOR HMA OVERSIDE DRAIN DETAILS AND SPECIFICATIONS. THE PROJECT ENGINEER SHALL PROVIDE ALL DESIGN SPECIFICATIONS ON THE PLANS.
3. CONSTRUCT TRASH RACK PER THE STATE STANDARD PLAN D75C IF DIRECTED BY THE DEPARTMENT.
4. A LID MAY BE USED WHEN THE RISER IS NOT LOCATED IN SUMP CONDITIONS, OTHERWISE USE TYPE "GMP" OR "GCP" GRATE. PROJECT ENGINEER SHALL PROVIDE HYDRAULIC CALCULATIONS.
5. MINIMUM CUT SLOPE SHALL BE 2 HORIZONTAL:1 VERTICAL (3h:1v IN NATIVE SAND).
6. TYPE "A" HMA DIKE PER DRAWING C-6.
7. SLOPE TO DRAIN TOWARDS RISER OPENING.
8. 2-INCH MINIMUM HOT MIX ASPHALT OVER 6-INCH MINIMUM COMPACTED AGGREGATE BASE.
9. RISER FLOOR SLOPED TO DRAIN AT 4h:1v TOWARDS OUTLET, PROVIDE WOOD FLOAT FINISH.
10. CONCRETE SHALL BE 565 LBS/CY CEMENTITIOUS MATERIAL [6 SACK], OVER 6-INCH MINIMUM CLASS II AGGREGATE BASE TO 95% RELATIVE COMPACTION.
11. ALL EXPOSED STEEL SHALL BE COLD GALVANIZED.
12. A DRAINAGE EASEMENT SHALL BE OFFERED TO THE PUBLIC WHENEVER THE IMPROVEMENTS EXTEND BEYOND THE RIGHT-OF-WAY.
13. MODIFY AS REQUIRED FOR SUMP CONDITIONS.
14. INSTALL STORM DRAIN MARKER PER M-6.

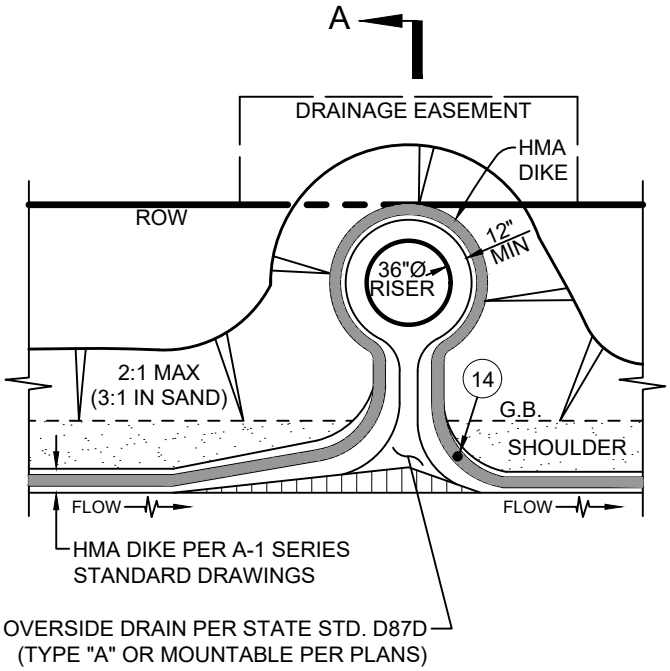

PLAN

REDUCED SCALE

DEPARTMENT OF PUBLIC WORKS - STANDARD DRAWINGS

DRAINAGE & FLOOD CONTROL

RURAL CATCH BASIN-HMA DIKE

Issued:	Scale:
August 2022	1"=4'
Revised:	Revision No:
Drawing No:	D-2b

NOTES:

1. USE OF THIS STANDARD DRAWING WITHIN THE PUBLIC RIGHT-OF-WAY SHALL REQUIRE PRIOR DEPARTMENT APPROVAL.
2. CONCRETE BOX BASE SECTION, TRAFFIC RATED TOP SLAB, GRADE RINGS, CURB TOP, GRATE, FRAME AND COVER SHALL BE "MID-STATE CONCRETE PRODUCTS" SLO COUNTY STANDARD OR APPROVED EQUAL.
3. REFER TO SECTION 5 FOR ADDITIONAL DESIGN CRITERIA.
4. PROVIDE 2-FEET MIN COVER OVER THE PERFORATED STORM DRAIN, AND PROVIDE 12-INCHES MIN CROSSING CLEARANCE BETWEEN UTILITY LATERAL CROSSINGS AND THE PERFORATED STORM DRAIN.
5. A 30"Ø HDPE PERFORATED STORM DRAIN SHALL BE REQUIRED BY THE DEPARTMENT.
6. INSTALL STORM DRAIN MARKER PER M-6.

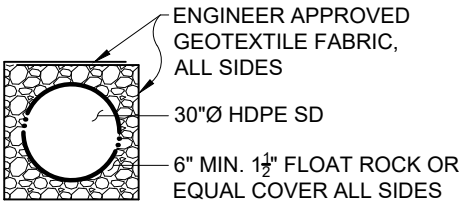

TYPICAL PIPE SECTION
SCALE: 1"=5'

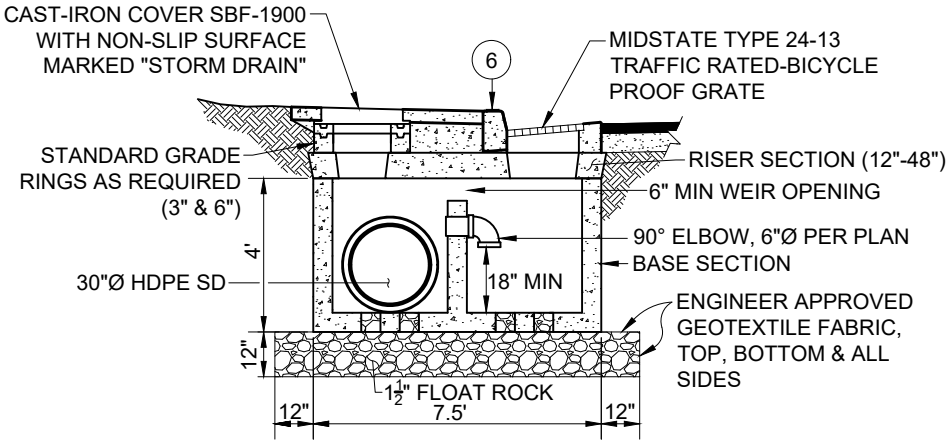

SECTION A-A
SCALE: 1"=5'

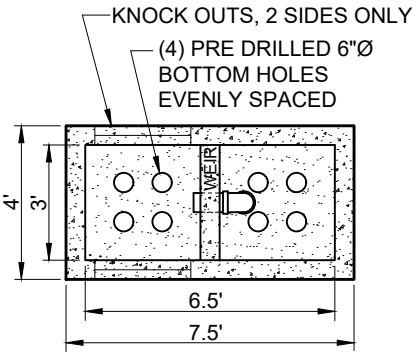

PLAN VIEW WITHOUT LID
SCALE: 1"=5'

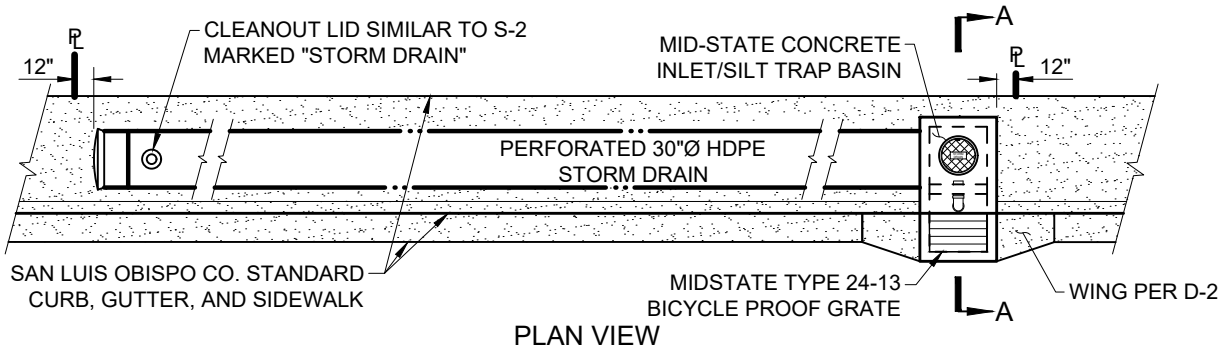

PLAN VIEW
SCALE: 1"=10'

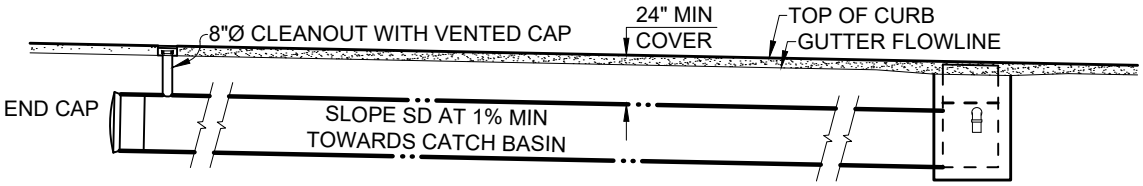

ELEVATION
SCALE: 1"=10'

DEPARTMENT OF PUBLIC WORKS - STANDARD DRAWINGS

DRAINAGE & FLOOD CONTROL

ROADSIDE INFILTRATOR

Issued:	Scale:
August 2022	AS SHOWN
Revised:	Revision No:
Drawing No:	D-2c

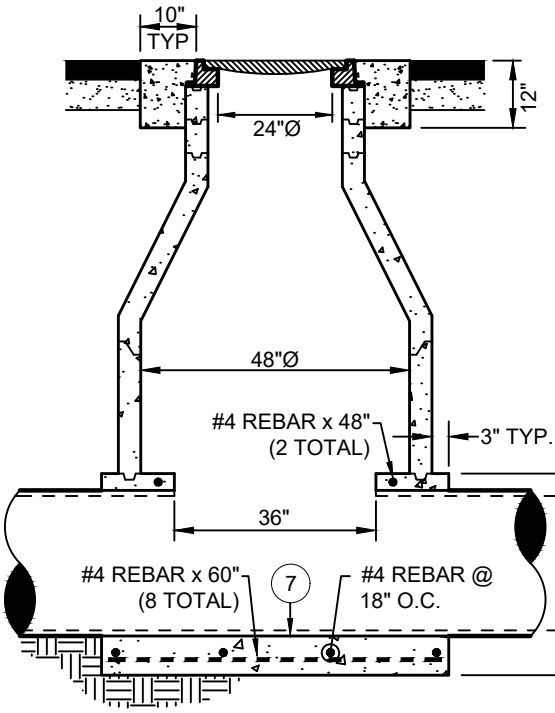

SECTION A-A

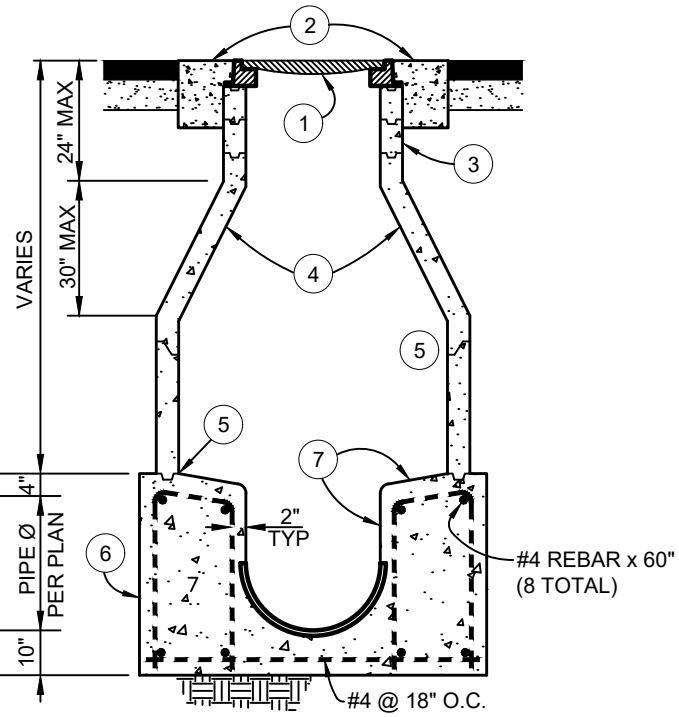

SECTION B-B

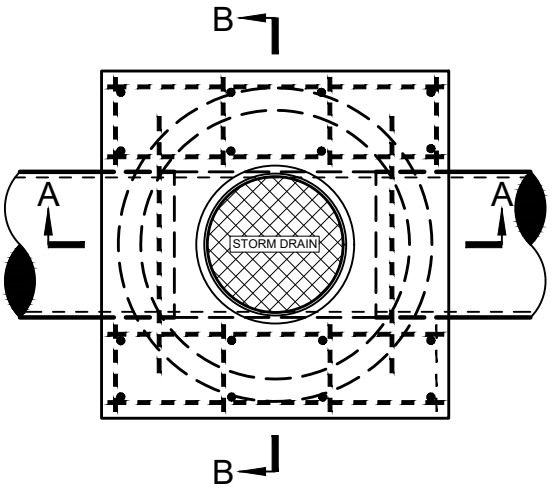

PLAN

NOTES:

1. MANHOLE COVER AND FRAME SHALL HAVE A MINIMUM 24"Ø OPENING AND CONFORM TO HS-20 TRAFFIC LOADING. LID SHALL HAVE AN OPEN PICKHOLE, AND BE LETTERED "STORM DRAIN".
2. COLLAR SHALL BE PORTLAND CEMENT CONCRETE, TROWELLED TO STREET GRADE, AND ALLOWED TO CURE 48 HOURS PRIOR TO FULL TRAFFIC USE.
3. PROVIDE ADJUSTING RINGS AS NEEDED, GROUTED ON THE INSIDE. PROVIDE HYDRAULIC CEMENT GROUT BETWEEN MANHOLE FRAME AND TOP RING PER APPENDIX C3.
4. PRECAST SHAFT(S) AND CONCENTRIC CONE SHALL MEET ASTM C-478 61T FOR CLASS 2 REINFORCED CONCRETE PIPE, OR AS APPROVED BY THE DEPARTMENT.
5. JOINTS SHALL BE WATERTIGHT, SET WITH BUTYL RUBBER SEALANT (RUB'R-NEK OR EQUAL).
6. CONCRETE MANHOLE BASE SHALL CONFORM TO STATE STANDARD SPECIFICATIONS, 565 LBS/CY CEMENTITIOUS MATERIAL [6 SACK], AND REST UPON UNDISTURBED MATERIAL. BOTTOM SHAFT SHALL BE WET-SET OR SET IN FORMED GROOVE. PRECAST BASES MAY BE USED WITH PRIOR APPROVAL OF THE DEPARTMENT AND SHALL MEET ASTM C-478 61T.
7. PIPE SHALL BE LAID THROUGH MANHOLE, AND TOP PORTION REMOVED AFTER BASE IS POURED. TROUGH SHALL HAVE STEEL-TROWEL FINISH, VERTICAL SIDES, ROUNDED CORNERS. TOP SURFACE SHALL HAVE 1-INCH PER 12-INCH SLOPE TOWARD TROUGH.
8. EQUIVALENT PRECAST BASE SHALL BE ALLOWED.
9. UNDER NO CIRCUMSTANCES SHALL UTILITY LIDS AND CONCRETE COLLARS BE LOCATED WITHIN CURBS, GUTTERS, SIDEWALKS, DRIVEWAY APRONS, CURB RAMPS, OR CROSS GUTTERS.
10. LOCKING LIDS MAY BE REQUIRED BY THE DEPARTMENT.

DEPARTMENT OF PUBLIC WORKS - STANDARD DRAWINGS

DRAINAGE & FLOOD CONTROL

MANHOLE FOR PIPE DIA. 18" TO 36"

Issued:	Scale:
August 2022	NTS
Revised:	Revision No:
Drawing No:	D-3

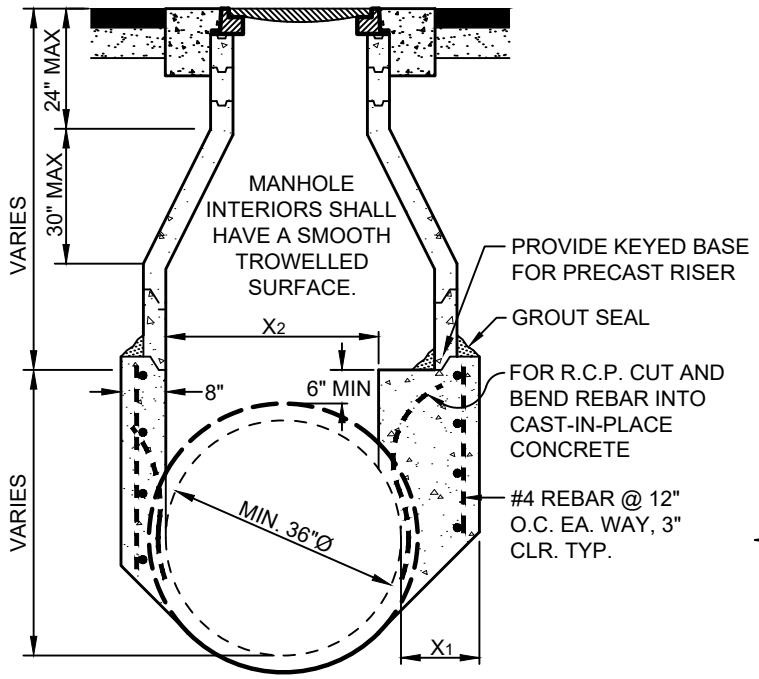

SECTION A-A

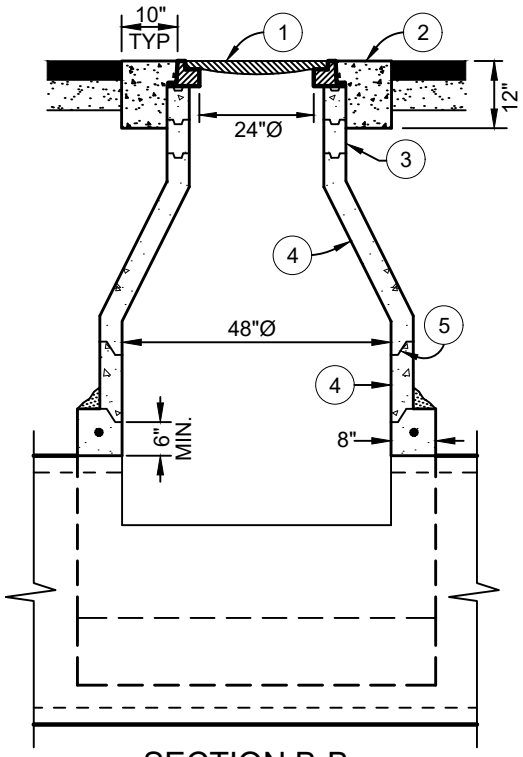

SECTION B-B

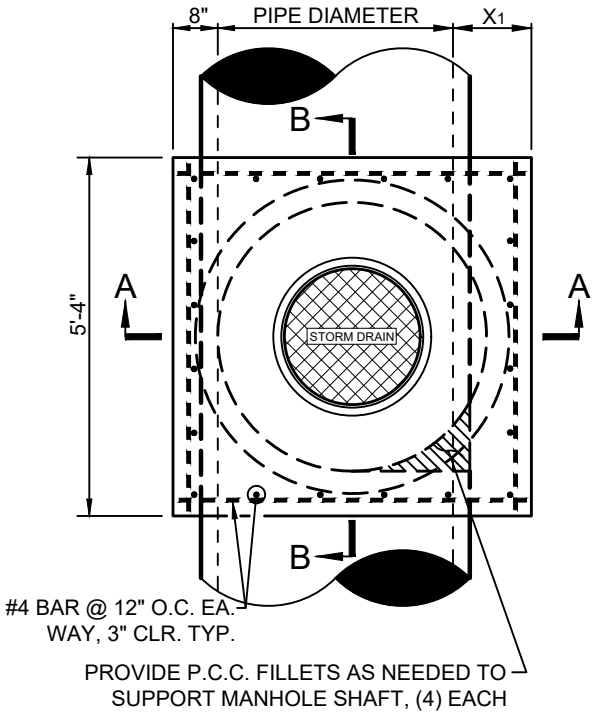

PLAN

DIMENSIONS				
PIPEØ	36"	42"	48"	54" AND GREATER
X_1	20"	14"	8"	EQUALS PIPE WALL THICKNESS
X_2	32"	38"	44"	48"

NOTES:

1. MANHOLE COVER AND FRAME SHALL HAVE A MINIMUM 24"Ø OPENING AND CONFORM TO HS-20 TRAFFIC LOADING. LID SHALL HAVE AN OPEN PICKHOLE, AND BE LETTERED "STORM DRAIN".
2. COLLAR SHALL BE PORTLAND CEMENT CONCRETE, TROWELLED TO STREET GRADE, AND ALLOWED TO CURE 48 HOURS PRIOR TO FULL TRAFFIC USE.
3. PROVIDE ADJUSTING RINGS AS NEEDED, GROUTED ON THE INSIDE. PROVIDE HYDRAULIC CEMENT GROUT BETWEEN MANHOLE FRAME AND TOP RING PER APPENDIX C3.
4. PRECAST SHAFT(S) AND CONCENTRIC CONE SHALL MEET ASTM C-478 61T FOR CLASS 2 REINFORCED CONCRETE PIPE, OR AS APPROVED BY THE DEPARTMENT.
5. JOINTS SHALL BE WATERTIGHT, SET WITH BUTYL RUBBER SEALANT (RUB'R-NEK OR EQUAL).
6. UNDER NO CIRCUMSTANCES SHALL UTILITY LIDS AND CONCRETE COLLARS BE LOCATED WITHIN CURBS, GUTTERS, SIDEWALKS, DRIVEWAY APRONS, CURB RAMPS, OR CROSS GUTTERS.
7. LOCKING LIDS MAY BE REQUIRED BY THE DEPARTMENT.

DEPARTMENT OF PUBLIC WORKS - STANDARD DRAWINGS

DRAINAGE & FLOOD CONTROL

MANHOLE FOR PIPE DIA. > 36"

Issued: August 2022	Scale: NTS
Revised:	Revision No:
Drawing No: D-3a	

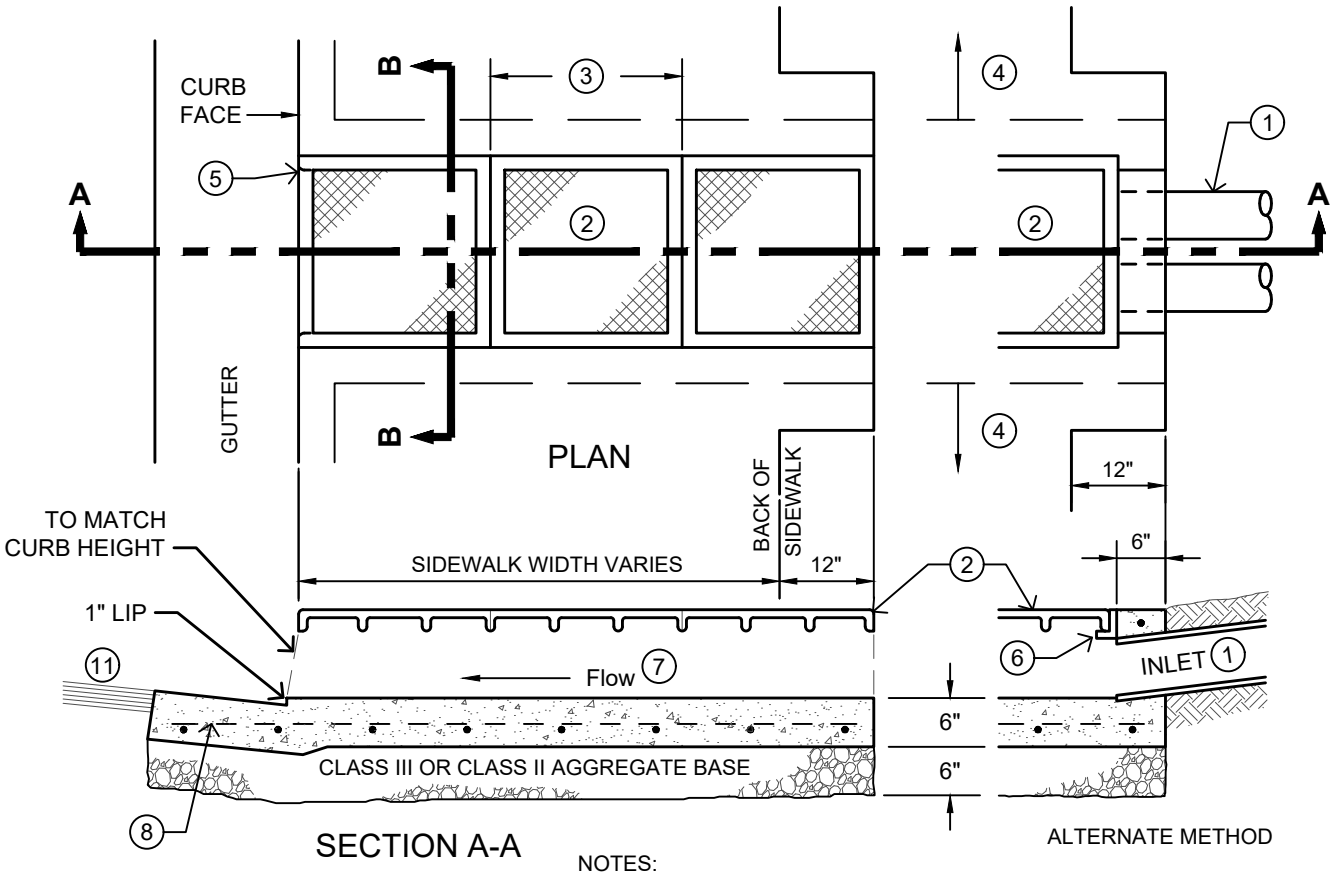

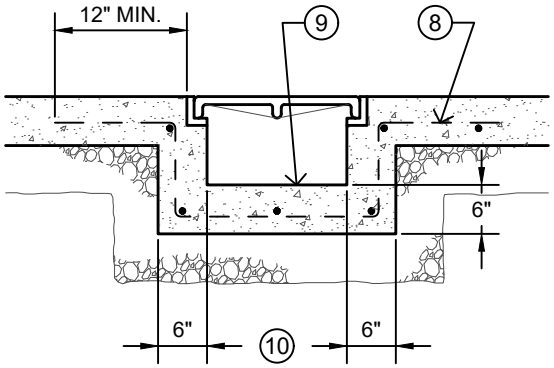

SECTION B-B

NOTES:

1. INLET SHALL BE PAVED SWALE, RECTANGULAR CONDUIT, OR PIPE(S). MAXIMUM INLET DIAMETER/HEIGHT SHALL BE CURB HEIGHT MINUS 2-INCHES. A JUNCTION BOX SHALL HAVE ACCESS/CLEANOUT. INLET TYPE SHALL HAVE APPROVAL OF COUNTY ENGINEER.
2. FRAME AND COVERS: NEENAH R-4990, TYPE D, SOLID TOP WITH PERMA-GRIP SURFACE, OR APPROVED EQUAL. THERE SHALL BE A ⅛" SPACE BETWEEN THE FRAME AND THE LID. WHEN UNDERDRAIN IS LOCATED IN MISSION STYLE SIDEWALK, COVERS SHALL BE COATED WITH EPOXY PAINT COLORED TO MATCH SIDEWALK COLOR.
3. COVER LENGTH SHALL MAINTAIN A COVER WEIGHT OF AT LEAST 100 LBS EACH.
4. UNDERDRAIN SHALL NOT BE CLOSER THAN 5-FEET FROM DRIVEWAY OR CURB RETURN.
5. 1-INCH RADIUS AT END OF CHANNEL, EACH SIDE OF OUTLET.
6. FRAME END PIECE, REQUIRED FOR ALTERNATE METHOD.
7. CHANNEL SLOPE SHALL BE NO LESS THAN 2% AND SHALL BE PARALLEL WITH SIDEWALK SURFACE.
8. #4 REBAR @ 12" O.C., BOTH WAYS.
9. CONCRETE SHALL BE CLASS 3.
10. CHANNEL WIDTH VARIES: 18-INCH MIN. TO 3-FEET MAX.
11. SEE STANDARD DRAWING R-4 SIDEWALK REPAIR.

DEPARTMENT OF PUBLIC WORKS - STANDARD DRAWINGS

DRAINAGE & FLOOD CONTROL

SIDEWALK UNDERDRAIN

Issued: August 2022	Scale: NTS
Revised:	Revision No:
Drawing No: D-4	

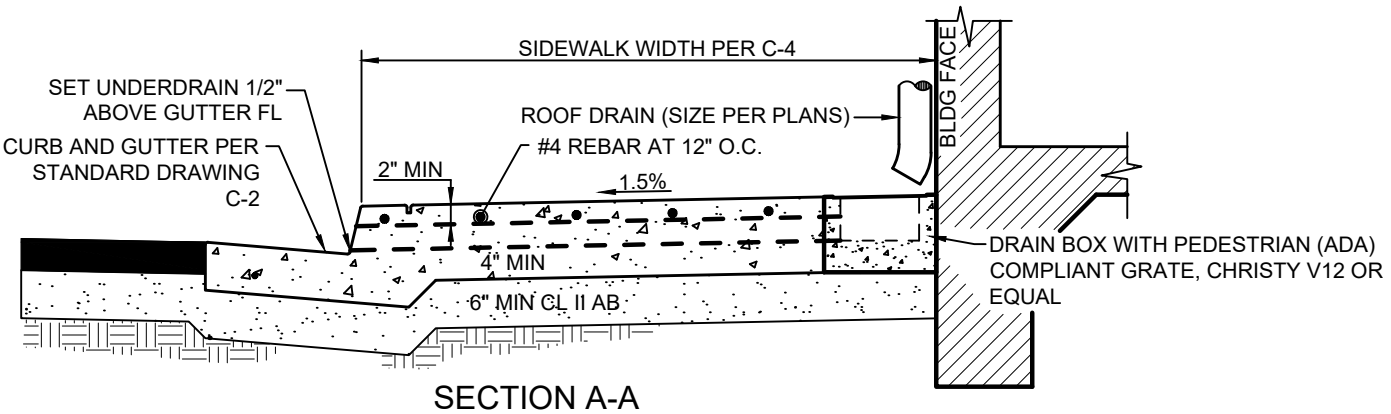

SECTION A-A

SHOWN AT 90°

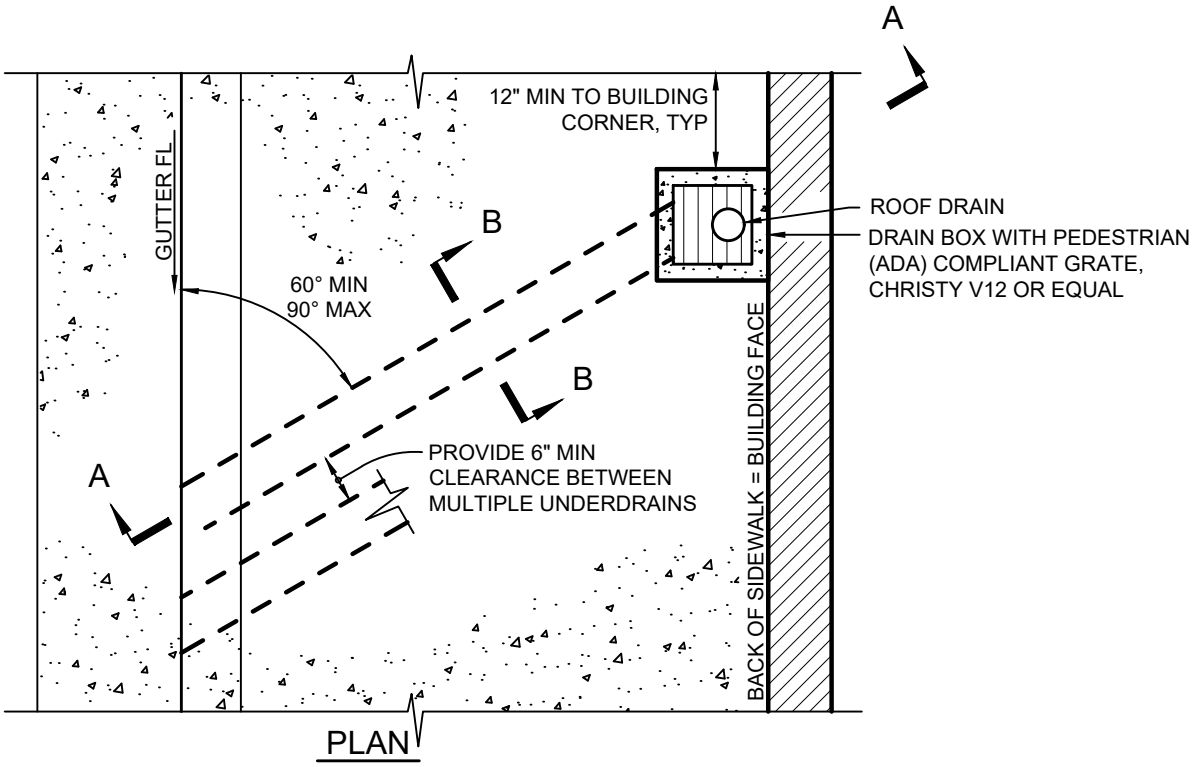

PLAN

NOTES:

1. THE UNDERDRAIN SHALL BE A 3-INCH TALL BY 5-INCH WIDE (MINIMUM) RECTANGULAR CAST IRON CONDUIT, ALHAMBRA A-470 OR DEPARTMENT APPROVED EQUAL. THE DESIGN WIDTH SHALL BE DETERMINED BY THE PROJECT ENGINEER AND SHOWN ON THE PLANS.
2. THE UNDERDRAIN SHALL BE SET FLUSH WITH THE CURB FACE AND PLACED 1/2-INCH ABOVE THE GUTTER FLOWLINE.
3. THE SLOPE OF THE UNDERDRAIN SHALL MATCH THE SIDEWALK CROSS SLOPE.
4. UNDERDRAIN SHALL NOT BE LOCATED CLOSER THAN 5-FEET TO A DRIVEWAY OR CURB RETURN.
5. MULTIPLE DRAINS SHALL HAVE 6-INCH MINIMUM CLEARANCE WITH MAXIMUM OF THREE (3) DRAINS PER 10-FEET OF SIDEWALK.
6. ALL JUNCTION BOXES SHALL HAVE A PEDESTRIAN RATED GRATE OR NON-SLIP LID AND BE APPROVED BY THE DEPARTMENT.

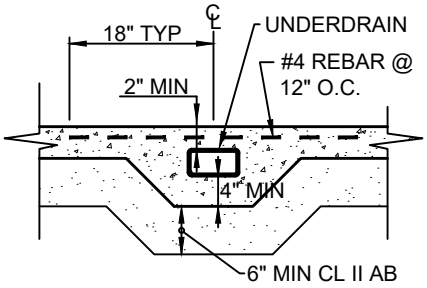

ADD SCORE LINE IN CONCRETE DIRECTLY ABOVE PIPE EDGES

SECTION B-B

DEPARTMENT OF PUBLIC WORKS - STANDARD DRAWINGS

DRAINAGE & FLOOD CONTROL

SIDEWALK UNDERDRAIN

Issued: August 2022	Scale: 1"=2'
Revised:	Revision No:
Drawing No: D-4a	

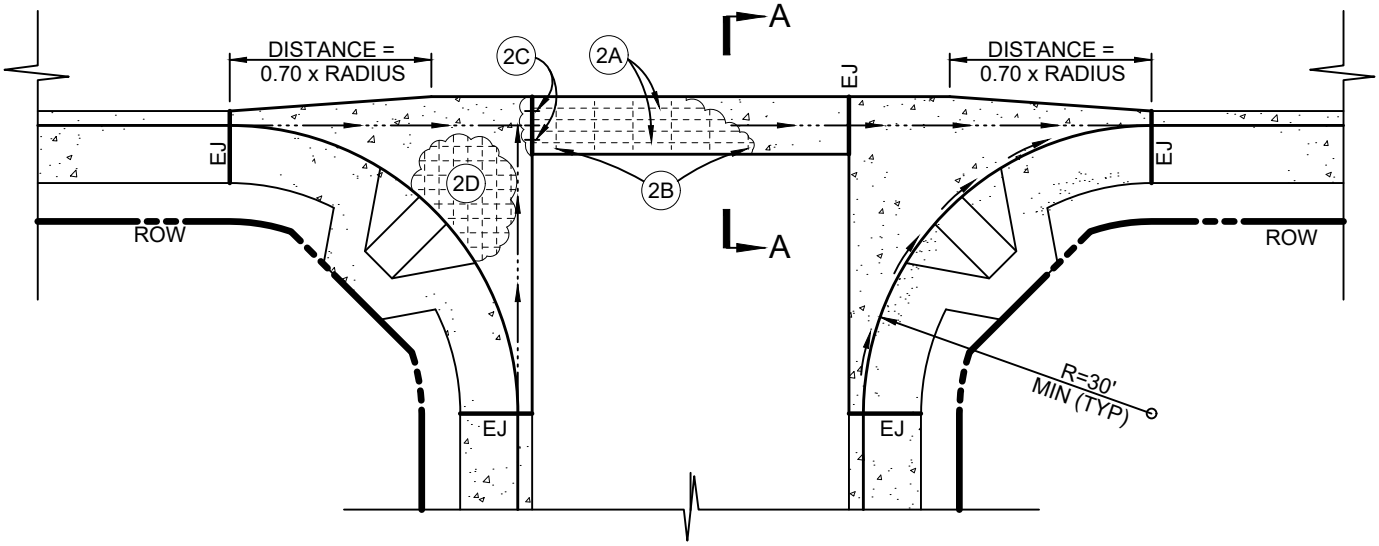

PLAN VIEW

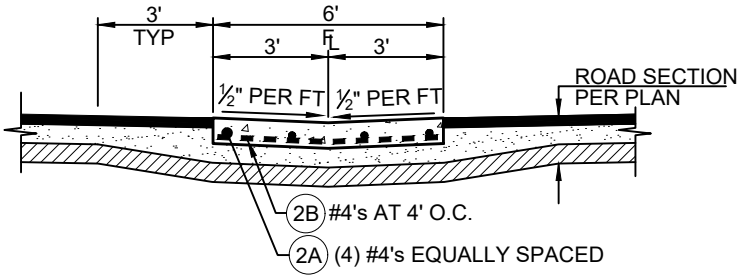

SECTION A-A

NOTES:

1. TYPICAL CROSS GUTTER & SPANDREL SECTION SHALL BE:
   - 8" MINIMUM PORTLAND CEMENT CONCRETE PER THE DESIGN STANDARDS, OVER
   - 6" MINIMUM CLASS II AGGREGATE BASE (OR MATCH ROAD SECTION) TO 95% RELATIVE COMPACTION, OVER
   - 12" MINIMUM SUBGRADE TO 95% RELATIVE COMPACTION
2. TYPICAL CROSS GUTTER & SPANDREL REINFORCEMENT SHALL BE:
   2A. (4) #4 REBAR CONTINUOUS & EQUALLY SPACED
   2B. #4 REBAR AT 4-FEET ON CENTER
   2C. EXPANSION JOINT WITH (3) 1/2"Ø x 36" SMOOTH GREASED DOWELS (TYPICAL BOTH SIDES)
   2D. #4 REBAR AT 18" ON CENTER ALL WAYS (3" CLEAR FROM ALL EDGES, TYPICAL)
   IN ALL CASES, DOBIES SET 2-INCHES ABOVE FINISHED AGGREGATE BASE SHALL BE USED TO SUPPORT REINFORCEMENT.
3. CONCRETE SHALL CONFORM TO STATE STANDARD SPECIFICATIONS, 520 LBS/CY CEMENTITIOUS MATERIAL [5-1/2 SACK]. CONCRETE CURING SHALL BE BY PIGMENTED CURING COMPOUND METHOD USING WHITE PIGMENT TYPE.
4. CURB RAMPS SHALL BE INSTALLED PER STANDARD DRAWING C-5.
5. UNDER NO CIRCUMSTANCES SHALL UTILITY LIDS AND CONCRETE COLLARS BE LOCATED WITHIN THE CROSS GUTTER OR SPANDREL.

DEPARTMENT OF PUBLIC WORKS - STANDARD DRAWINGS

DRAINAGE & FLOOD CONTROL

CROSS GUTTER & SPANDRELS

Issued:	Scale:
August 2022	1"=20'
Revised:	Revision No:
Drawing No:	D-5

SAN LUIS OBISPO COUNTY
AVERAGE ANNUAL PRECIPITATION

(JULY 1 THROUGH JUNE 30) FOR 42 YEAR PERIOD
FROM 1955-56 THROUGH 1997-98)

SAN LUIS OBISPO FLOOD CONTROL AND WATER
CONSERVATION DISTRICT

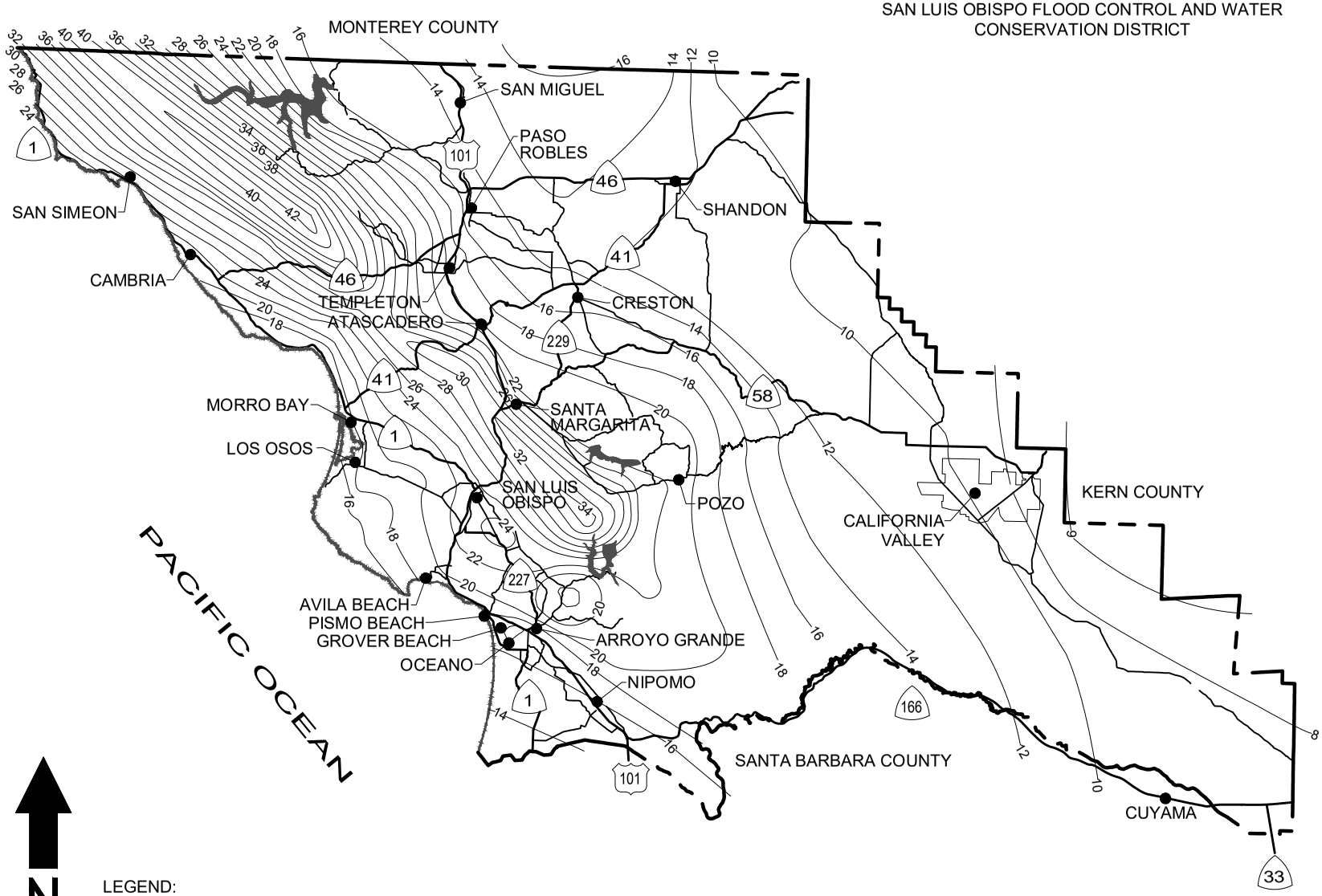

N

LEGEND:
22 - AVERAGE ANNUAL PRECIPITATION (INCHES)

DEPARTMENT OF PUBLIC WORKS - STANDARD DRAWINGS

HYDROLOGY

AVERAGE ANNUAL RAINFALL

Issued: August 2022	Scale: NTS
Revised:	Revision No:
Drawing No: H-1	

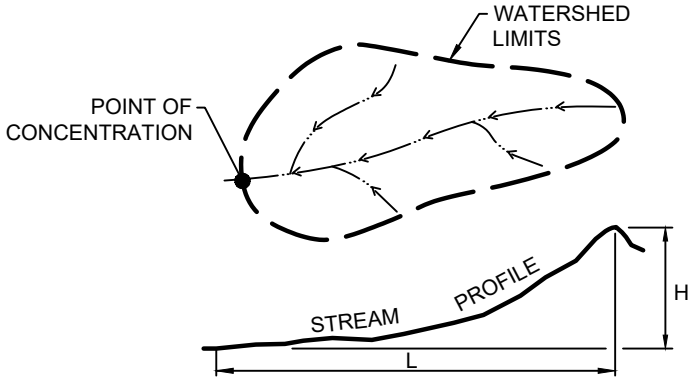

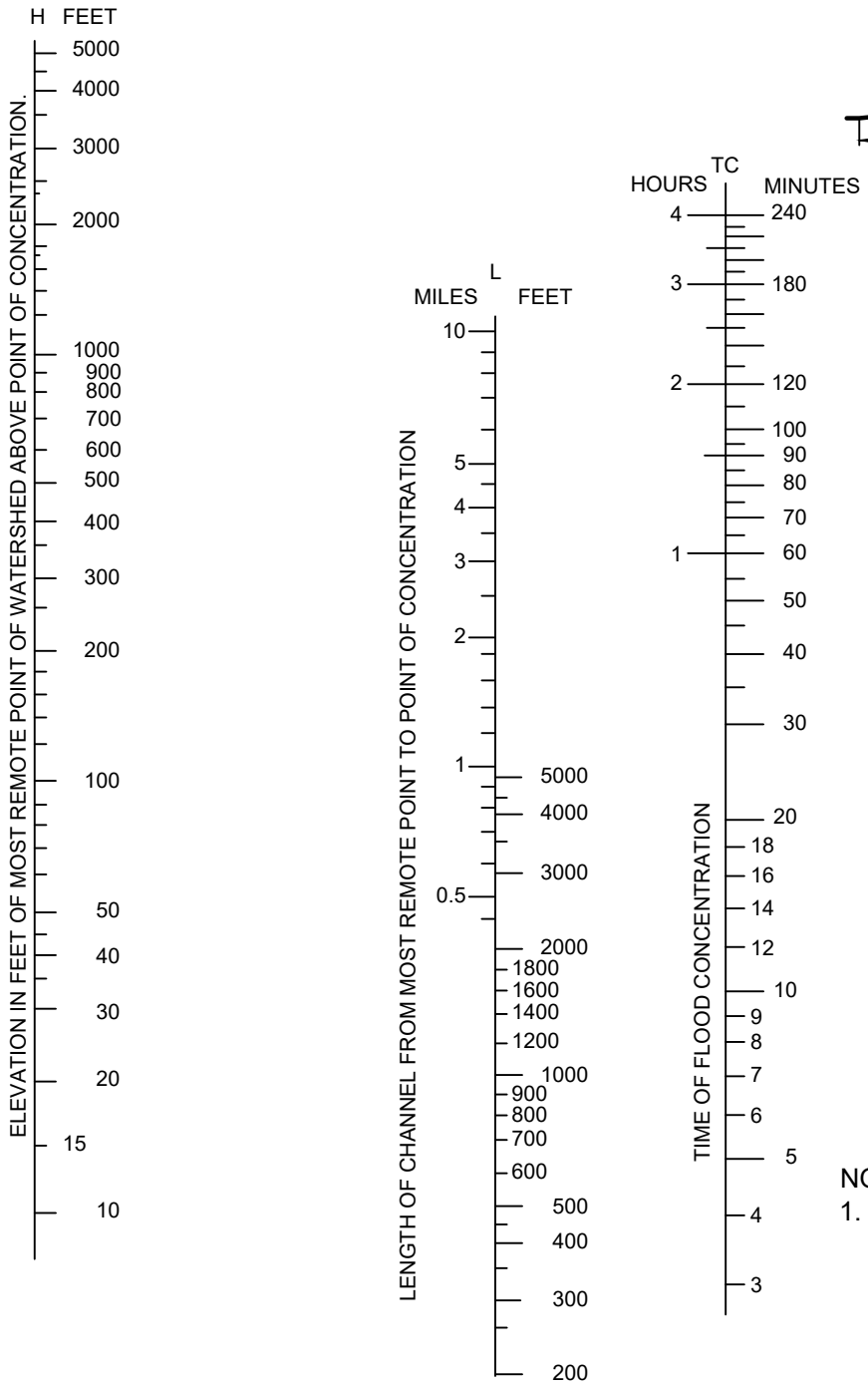

EQUATIONS FOR ESTIMATED "TIME OF CONCENTRATION"

$$T_c = \left(\frac{11.9L^3}{H}\right)^{0.385}$$

LEGEND:

Tc = TIME OF CONCENTRATION IN HOURS.

L = LENGTH OF CHANNEL IN MILES.

H = DIFFERENCE IN ELEVATION BETWEEN MOST REMOTE POINT AND THE POINT OF CONCENTRATION IN FEET.

NOTES:

1. THIS NOMOGRAPH IS LIMITED TO WATERSHED AREAS OF 200 ACRES OR LESS. FOR LARGER WATERSHEDS REFER TO THE DESIGN STANDARDS.

REF: P.Z. KIRPICH, CIVIL ENGINEERING, Vol. 10, No. 6, JUNE 1940, p. 362
FOR WATERSHEDS LESS THAN 200 ACRES

DEPARTMENT OF PUBLIC WORKS - STANDARD DRAWINGS

HYDROLOGY

TIME OF CONCENTRATION

Issued: August 2022	Scale: NTS
Revised:	Revision No:
Drawing No: H-2	

TABLE 1: RATIONAL METHOD STANDARD RUNOFF COEFFICIENTS FOR DEVELOPED AREAS

TYPE OF DEVELOPMENT	SOIL TYPE	SLOPE <2%	SLOPE 2% to 10%	SLOPE >10%	FOOT NOTE
RESIDENTIAL LOTS > 20,000 SF	C	0.35	0.40	0.50	1,2
	S	0.25	0.35	0.40	1,2
RESIDENTIAL LOTS 10,000 SF TO 19,999 SF	C	0.40	0.45	0.55	1,2
"	S	0.30	0.40	0.45	1,2
RESIDENTIAL LOTS 6,000 SF TO 9,999 SF	C	0.45	0.55	0.65	1,2
"	S	0.35	0.40	0.50	1,2
PLANNED DEVELOPMENTS (PUD)	C	0.65	0.70	0.75	1,2
"	S	0.60	0.65	0.70	1,2
APARTMENTS	C	0.50	0.60	0.70	2
"	S	0.40	0.50	0.60	2
INDUSTRIAL	C	0.55	0.65	0.75	2
"	S	0.45	0.55	0.65	2
COMMERCIAL	C	0.75	0.80	0.85	2
"	S	0.70	0.75	0.80	2

FOOT NOTES:
1. ESTIMATION OF COMPOSITE "C" VALUE USING ESTIMATED IMPERVIOUS AREAS AND STD. DWG. H-3a (TABLE 2) MAY BE REQUIRED BY THE DEPARTMENT. IMPERVIOUS AND PAVED AREAS SHALL USE C=0.95.
2, ALL VALUES SHOWN ARE INTENDED TO BE MINIMUMS. HIGHER VALUES MAY BE REQUIRED BY THE DEPARTMENT.

LEGEND:
C - CLAY, ADOBE, ROCK, OR IMPERVIOUS MATERIAL
S - SAND, GRAVEL, LOAM, OR PERVIOUS MATERIAL

NOTES:
1. COEFFICIENTS FOR RESIDENTIAL LOTS ASSUME TYPICAL SINGLE FAMILY RESIDENCE WITH ASSOCIATED GARAGE, DRIVEWAY, FLATWORK, AND LANDSCAPING. HIGHER DENSITY RESIDENTIAL DEVELOPMENTS MAY REQUIRE USING COMPOSITE COEFFICIENT EVALUATED BY THE DESIGN ENGINEER AND BASED ON PROPOSED DEVELOPMENT IMPERVIOUS AREAS.
2. FOR ALL TYPES OF DEVELOPMENT, COEFFICIENTS ARE INCLUSIVE OF ONLY THE LOT AREA OUTSIDE THE RIGHT-OF-WAY (NET LOT AREA). PAVED SURFACES BETWEEN ROAD CENTERLINE AND RIGHT-OF-WAY SHALL BE EVALUATED SEPARATELY AND INCLUDED TO DETERMINE A COMPOSITE "C" FACTOR.
3. ALL IMPERVIOUS AREAS AND PAVED AREAS SHALL USE C = 0.95.

TABLE 2: RATIONAL METHOD STANDARD RUNOFF COEFFICIENTS FOR UNDEVELOPED AREAS

	EXTREME	HIGH	NORMAL	LOW
RELIEF	0.28 TO 0.35 STEEP, RUGGED TERRAIN WITH AVERAGE SLOPES ABOVE 30%	0.20 TO 0.28 HILLY, WITH AVERAGE SLOPES OF 10% TO 30%	0.14 TO 0.20 ROLLING, WITH AVERAGE SLOPE OF 5% TO 10%	0.08 TO 0.14 RELATIVELY FLAT LAND, WITH AVERAGE SLOPES OF 0% TO 5%
SOIL INFILTRATION	0.12 TO 0.16 NO EFFECTIVE SOIL COVER, EITHER ROCK OR THIN MANTLE OF NEGLIGIBLE INFILTRATION CAPACITY	0.08 TO 0.12 SLOW TO TAKE UP WATER, CLAY OR SHALLOW LOAM SOILS OF LOW INFILTRATION CAPACITY, IMPERFECTLY OR POORLY DRAINED	0.06 TO 0.08 NORMAL; WELL DRAINED LIGHT OR MEDIUM TEXTURED SOILS, SANDY LOAMS, SILT AND SILT LOAMS	0.04 TO 0.06 HIGH; DEEP SAND OR OTHER SOILS THAT TAKES UP WATER READILY, VERY LIGHT WELL DRAINED SOILS
VEGETAL COVER	0.12 TO 0.16 NO EFFECTIVE PLANT COVER, BARE OR VERY SPARSE COVER	0.08 TO 0.12 POOR TO FAIR; CULTIVATION CROPS, OR POOR NATURAL COVER, LESS THAN 20% OF DRAINAGE AREA OVER GOOD COVER	0.06 TO 0.08 FAIR TO GOOD; ABOUT 50% OF AREA IN GOOD GRASSLAND OR WOODLAND, NOT MORE THAN 50% OF AREA IN CULTIVATED CROPS	0.04 TO 0.06 GOOD TO EXCELLENT; ABOUT 90% OF DRAINAGE AREA IN GOOD GRASSLAND, WOODLAND, OR EQUIVALENT COVER
SURFACE STORAGE	0.10 TO 0.12 NEGLIGIBLE SURFACE DEPRESSIONS FEW AND SHALLOW; DRAINAGE WAYS STEEP AND SMALL, NO MARSHES	0.08 TO 0.10 LOW; WELL DEFINED SYSTEM OF SMALL DRAINAGE WAYS, NO PONDS OR MARSHES	0.06 TO 0.08 NORMAL; CONSIDERABLE SURFACE STORAGE, LAKES AND POND MARSHES	0.04 TO 0.06 HIGH; SURFACE STORAGE, HIGH; DRAINAGE SYSTEM NOT SHARPLY DEFINED; LARGE FLOOD PLAIN STORAGE OR LARGE NUMBER OF PONDS OR MARSHES

(REFERENCES FIGURE 819.2A OF HIGHWAY DESIGN MANUAL)

EXAMPLE:

GIVEN: AN UNDEVELOPED WATERSHED CONSISTING OF:
1. ROLLING TERRAIN WITH AVERAGE SLOPES OF 5%
2. CLAY SOILS
3. GOOD GRASSLAND AREA
4. NORMAL SURFACE DEPRESSIONS

FIND: THE RUNOFF COEFFICIENT FOR THE ABOVE WATERSHED

SOLUTION:
1. RELIEF = 0.14
2. SOIL INFILTRATION = 0.08
3. VEGETAL COVER = 0.04
4. SURFACE STORAGE = 0.06

ANSWER: THE RUNOFF COEFFICIENT, C = 0.14 + 0.08 + 0.04 + 0.06 = 0.32

TABLE 1: ANNUAL RAINFALL < 14"

Recurrence Interval (Years)	Duration: 10 Min	15 Min	30 Min	1 Hr	2 Hr	3 Hr	6 Hr	10 Hr
2	1.00	0.90	0.60	0.40	0.26	0.22	0.18	0.14
5	1.40	1.20	0.80	0.50	0.37	0.32	0.25	0.20
10	1.70	1.40	1.00	0.60	0.44	0.38	0.30	0.23
25	2.00	1.70	1.10	0.70	0.54	0.47	0.37	0.28
50	2.20	1.90	1.30	0.80	0.60	0.53	0.44	0.34
100	2.40	2.10	1.40	0.90	0.65	0.59	0.48	0.36

Intensity (inches/hour)

TABLE 2: ANNUAL RAINFALL 14" TO 17"

Recurrence Interval (Years)	Duration: 10 Min	15 Min	30 Min	1 Hr	2 Hr	3 Hr	6 Hr	10 Hr
2	1.30	1.10	0.80	0.50	0.35	0.30	0.23	0.18
5	1.90	1.60	1.10	0.70	0.49	0.42	0.33	0.26
10	2.30	1.90	1.30	0.80	0.60	0.51	0.40	0.30
25	2.60	2.20	1.50	1.00	0.71	0.63	0.50	0.38
50	3.00	2.50	1.70	1.10	0.81	0.74	0.60	0.47
100	3.20	2.70	1.90	1.20	0.90	0.80	0.65	0.49

Intensity (inches/hour)

TABLE 3: ANNUAL RAINFALL 18" TO 21"

Recurrence Interval (Years)	Duration: 10 Min	15 Min	30 Min	1 Hr	2 Hr	3 Hr	6 Hr	10 Hr
2	1.70	1.40	1.00	0.65	0.44	0.37	0.29	0.22
5	2.30	1.90	1.30	0.85	0.60	0.52	0.41	0.33
10	2.80	2.40	1.60	1.03	0.74	0.64	0.50	0.38
25	3.20	2.70	1.90	1.20	0.92	0.80	0.64	0.50
50	3.70	3.10	2.10	1.40	1.05	0.92	0.74	0.58
100	4.00	3.40	2.30	1.50	1.13	1.00	0.80	0.62

Intensity (inches/hour)

TABLE 4: ANNUAL RAINFALL 22" TO 28"

Recurrence Interval (Years)	Duration: 10 Min	15 Min	30 Min	1 Hr	2 Hr	3 Hr	6 Hr	10 Hr
2	2.10	1.80	1.20	0.77	0.55	0.47	0.36	0.28
5	2.80	2.50	1.70	1.05	0.76	0.64	0.52	0.42
10	3.60	3.00	2.10	1.30	0.92	0.81	0.64	0.48
25	3.90	3.50	2.40	1.50	1.10	0.98	0.78	0.60
50	4.50	3.90	2.60	1.70	1.28	1.15	0.94	0.72
100	5.00	4.30	2.90	1.85	1.40	1.25	0.98	0.76

Intensity (inches/hour)

W50 STANDARD ROCK WEIGHT. SELECT A W50 GREATER THAN DETERMINED STABLE ROCK WEIGHT (W)	D50 FEET OF STANDARD W50	TRENCH DEPTH (Z) IN FEET, 1.5 TIMES D50 OF STANDARD W50	RSP-CLASS METHOD B PLACEMENT	RSP-FABRIC TYPE NONWOVEN OR WOVEN
25 LBS	0.66	1.0	BACKING No 2	A or B
75 LBS	0.95	1.5	BACKING No 1	A or B
200 LBS	1.32	2.0	LIGHT	B
1/4 TON	1.79	2.7	1/4 TON	B
1/2 TON	2.26	3.4	1/2 TON	B
1 TON	2.85	4.3	1 TON	B

ROCK SIZE RSP CLASS	TRENCH DEPTH RANGE (Z)	TYPE OF RSP FABRIC
BACKING No 2	10"-16"	A or B
BACKING No 1	12"-18"	A or B
LIGHT	18"-24"	B
1/4 TON	30"-36"	B
1/2 TON	36"-42"	B
1 TON	48"-60"	B

CONSTRUCTION NOTES:

A. EXCAVATE AND/OR FILL DISSIPATER TRENCH TO DIMENSIONS (X, Y AND Z, SHOW ON PLAN SET (SQUARED EDGES NOT REQUIRED).
B. INSTALL FLARED END SECTION APPROPRIATELY SIZED FOR CULVERT.
C. PLACE RSP-FABRIC LOOSELY AND PIN IT TO ALL SIDES AND BOTTOM OF TRENCH.
D. PLACE RSP-CLASS OF DISSIPATER ROCK IN TRENCH. ROCK SHALL NOT PROTRUDE ABOVE CULVERT FLOWLINE OR ADJACENT GROUND. MATCH DISSIPATER GRADE WITH DOWNSTREAM FLOWLINE AND ADJACENT GROUND.
E. TRIM RSP FABRIC SO THAT NONE PROTRUDES ABOVE GROUND.

DESIGN METHOD:

1. DETERMINE ROCK SIZE BASED ON CULVERT OUTLET VELOCITY:
   a. FIRST TRIAL ROCK SIZE BY N.K. BERRY'S EQUATION (1948), SEE USBR EM-25:

      $$d = 0.0126V^2$$

      WHERE DIAMETER (d) FEET, VELOCITY (V) FPS, AND SG = 2.65.
   b. COMPARE TO CALTRANS BANK & SHORE EQUATION 1 WITH 1V:1.5H (IF H>1.5 SIZE WILL BE SMALL) AND SG = 2.65

      STABLE ROCK WEIGHT $W = 0.0000568V^6$

      EQUATION GIVES ROCK SIZE ON BANK USUALLY SMALLER THAN BERRY FOR BEDLOAD MOVEMENT ALONG CHANNEL BOTTOM
   c. ALSO COMPARE ABOVE ROCK SIZE TO HEC-14 CHART, FIGURE II-C-1, ON PAGE II-9 (1975), ORIGINALLY FROM SEARCY (1967).
   d. SELECT FINAL ROCK SIZE BASED ON ENGINEERING JUDGMENT AND FIELD EXPERIENCE. ADJUST (X) BASED ON SITE SPECIFIC CONSTRAINTS.
2. DETERMINING STABLE ROCK WEIGHT (W), STEP 1 ABOVE.
3. EXTEND FES 12" TO 24" INTO RSP TO PREVENT HEADCUT.
4. TABLE (STANDARD ROCK SIZES, D50, Z, RSP CLASS, RSP FABRIC TYPE).
5. RSP FABRIC DETAILS.

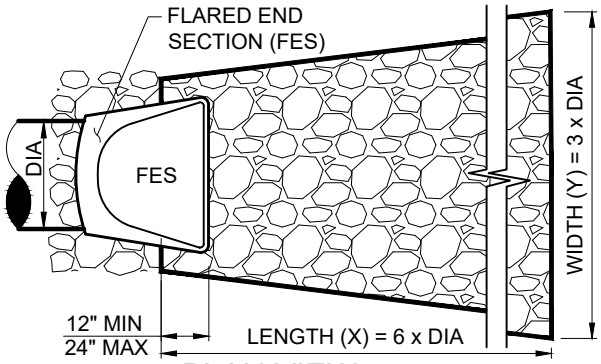

PLAN VIEW

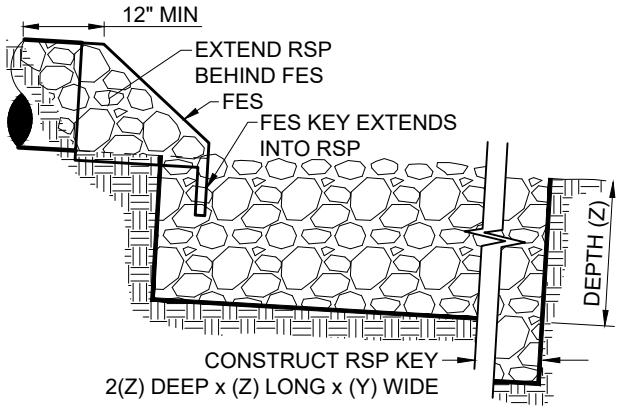

PROFILE VIEW

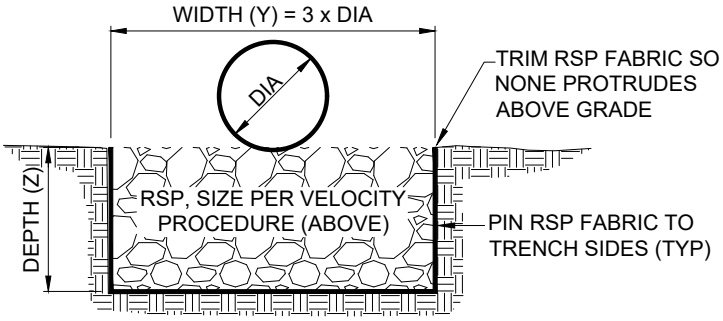

END VIEW

DEPARTMENT OF PUBLIC WORKS - STANDARD DRAWINGS

HYDROLOGY

ROCK SLOPE PROTECTION SIZING

Issued: August 2022	Scale: NTS
Revised:	Revision No:
Drawing No: H-5	

6"

3"

"Engineering Firm's Name, Address, & Phone Number"				
PUBLIC IMPROVEMENT PLANS FOR "Project Identification (Tract No., Parcel No., etc.)"				
"Sheet Title"				
Design/Drawn	County Plan Checker	APPROVED FOR COUNTY REQUIREMENTS Development Services Manager — Date		
Job No.	County W.O. No. 201R11-XXXX	"Engineer's Name and Registration Number" — Date		
California Coordinates N XXX E XXXX		County Post Miles XXXX	County Road No. XXXX	Sheet X Of XX

NOTES:
1. THE COUNTY TITLE BLOCK SHALL BE LOCATED IN THE LOWER RIGHT CORNER OF EACH SHEET WITHIN THE SET WITH EACH SHEET BEING STAMPED, SIGNED, AND DATED BY THE PROJECT ENGINEER.

BLOCK 1: COUNTY TITLE BLOCK

3"

1.5" MIN.

RECORD DRAWINGS	
"Engineer's Name & Registration No."	DATE
REVISIONS THIS SHEET:	
1	
2	
3	
4	
5	

NOTES:
1. EACH SHEET SHALL SHALL HAVE A RECORD DRAWING BLOCK AND BE SIGNED AND DATED BY THE ENGINEER OF WORK.
2. THE ENGINEER OF WORK SHALL WET STAMP AND SIGN EACH RECORD DRAWING SHEET IF THE ENGINEER OF WORK IS DIFFERENT THAN THE PROJECT ENGINEER.
3. REVISION NUMBERS SHALL BE USED ONLY ONCE WITHIN ALL SHEETS OF A SET. EACH ADDITIONAL REVISION SHALL HAVE ITS OWN UNIQUE NUMBER WITHIN THE SET.

BLOCK 2: COUNTY RECORD DRAWING BLOCK

AB - AGGREGATE BASE
ABN - ABANDON
AC - ASPHALT CONCRETE
ACD - ASPHALT CONCRETE DIKE
ADJ - ADJUST
ADT - AVERAGE DAILY TRAFFIC
ANG - ANGLE
APROX - APPROXIMATE
ASBLY - ASSEMBLY
AV - AIR VACUUM
AVO - AVOCADO TREE
BLDG - BUILDING
BM - BENCHMARK
BTM - BOTTOM
BVC - BEGIN VERTICAL CURVE
BW - BACK OF WALK (GRADE)
CATV - CABLE TELEVISION (LINE)
CB - CATCH BASIN
CIP - CAST IRON PIPE
CL - CENTERLINE
CMU - CONCRETE MASONRY UNIT
CNTR - CENTER
CO - CLEANOUT
COM - COMMUNICATIONS
CONC - CONCRETE
CSP - CORRUGATED STEEL PIPE
D/W - DRIVEWAY
DDCV - DOUBLE DETECTOR CHECK VALVE
DI - DROP INLET
EJ - EXPANSION JOINT
ELEC - ELECTRICAL
ELEV - ELEVATION
EP - EDGE OF PAVEMENT
ESMT - EASEMENT
ETW - EDGE OF TRAVELED WAY
EUC - EUCALYPTUS TREE
EVC - END VERTICAL CURVE
EXIST OR (E)- EXISTING
FG - FINISHED GRADE
FH - FIRE HYDRANT
FL - FLOWLINE
FM - FORCE MAIN
FNC - FENCE
FS - FINISHED SURFACE
FUT - FUTURE
G - GAS
GB - GRADE BREAK
GM - GAS METER
GP - GRADING PLAN
GR - GRATE
GV - GAS VALVE
HDPE - HIGH DENSITY POLYETHYLENE
HMA - HOT MIX ASPHALT
HORZ - HORIZONTAL
HP - HIGH POINT
HW - HEADWALL
ICV - IRRIGATION CONTROL VALVE
INV - INVERT
IPR - IRRIGATION PRESSURE REDUCER
IRR - IRRIGATION
JB - JUNCTION BOX
JP - JUNCTION POLE
LAT - LATERAL
LF - LINEAR FEET
LP - LOW POINT
LT - LEFT
MAX - MAXIMUM
MH - MANHOLE
MIN - MINIMUM
MON - MONUMENT
NTS - NOT TO SCALE
OAE - OR APPROVED EQUAL
OG - ORIGINAL (EXISTING) GROUND
OHW - OVERHEAD WIRE
OL - OVERLAY (PAVEMENT)
OPT - OPTION
OS - ORIGINAL SURFACE
UG - UNDERGROUND
PCC - PORTLAND CEMENT CONCRETE
PCCL - POINT OF COMPOUND CURVE LEFT
PCCR - POINT OF COMPOUND CURVE RIGHT
PCI - PAVEMENT CONDITION INDEX
PI - POINT OF INTERSECTION
PL - PROPERTY LINE
POC - POINT OF CONNECTION
PRC - POINT OF REVERSE CURVE
PRCL - POINT OF REVERSE CURVE LEFT
PRCR - POINT OF REVERSE CURVE RIGHT
PVC - POLYVINYL CHLORIDE
PVMT - PAVEMENT
RAD (R) - RADIUS
RCP - REINFORCED CONCRETE PIPE
RD - ROAD
REF - REFERENCE
REQ - REQUIRED
ROW (R/W) - RIGHT OF WAY
RSP - ROCK SLOPE PROTECTION
RT - RIGHT
S/W - SIDEWALK
SD - STORM DRAIN
SHLDR - SHOULDER
SHT - SHEET
SLOCO - SAN LUIS OBISPO COUNTY
SS - SANITARY SEWER
STA - STATION
STD - STANDARD
TB - THRUST BLOCK
TBA - TO BE ABANDONED IN PLACE
TBM - TEMPORARY BENCHMARK
TBR - TO BE REMOVED
TBP - TO BE PROTECTED
TC - TOP OF CURB
TEL - TELEPHONE
TEMP - TEMPORARY
TF - TOP OF FOOTING
TG - TOP OF GRATE
TRVLD - TRAVELED (LANE)
TYP - TYPICAL
TW - TOP OF WALL
UD - UNDER DRAIN
UP - UTILITY POLE
URL - URBAN RESERVE LINE
VERT - VERTICAL
VC - VERTICAL CURVE
VCP - VITRIFIED CLAY PIPE
VLT - VAULT
VLV - VALVE
VRL - VILLAGE RESERVE LINE
WL - WATER LINE
WM - WATER METER BOX
WPJ - WEAKENED PLANE JOINT
WS - WATER SERVICE
W.S. - WATER SURFACE
WV - WATER VALVE
WW - WING WALL
WWM - WELDED WIRE MESH
± - APPROXIMATE
Ø - DIAMETER

NOTES:

1. STATE STANDARD ABBREVIATIONS MAY BE USED IN CONJUNCTION WITH OR IN SUBSTITUTION OF THE DEPARTMENT'S STANDARD ABBREVIATIONS. THE PROJECT ENGINEER MAY SUBSTITUTE COUNTY/STATE ABBREVIATIONS WITH THEIR OWN; HOWEVER, AN ABBREVIATION LEGEND SHALL BE PROVIDED ON THE TITLE SHEET OF THE CONSTRUCTION PLANS.

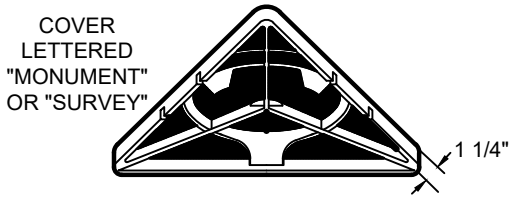

COVER (BOTTOM)

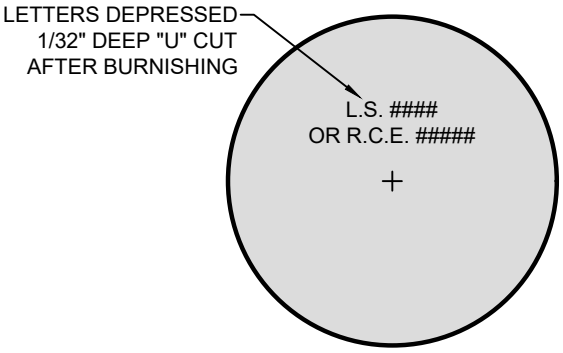

CAP PLAN

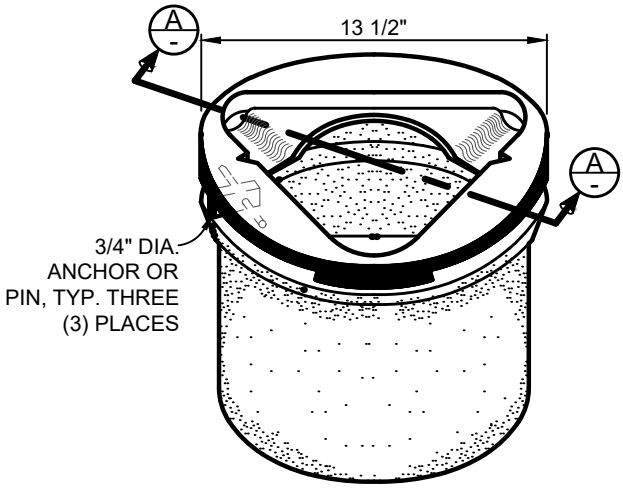

ISOMETRIC

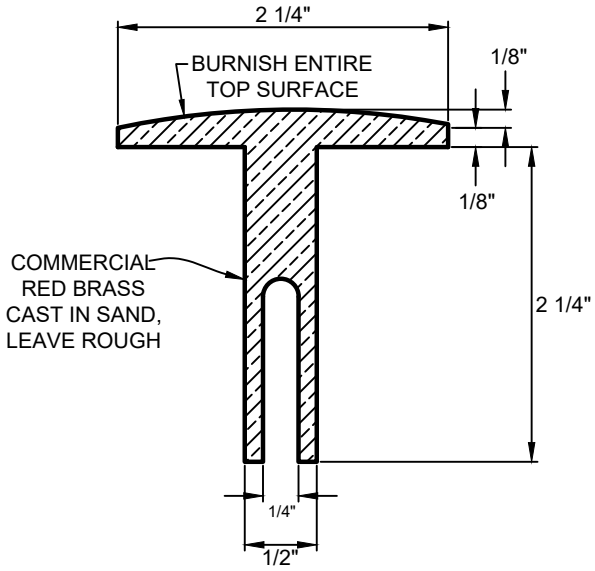

CAP SECTION

RISER RING

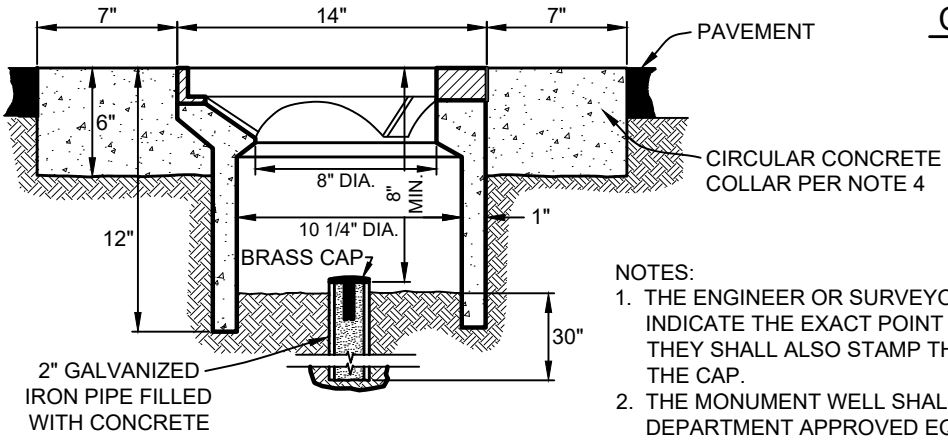

SECTION A-A

NOTES:

1. THE ENGINEER OR SURVEYOR SETTING THE MONUMENT SHALL INDICATE THE EXACT POINT BY MARKING A CROSS ON THE CAP. THEY SHALL ALSO STAMP THEIR LICENSE TYPE AND NUMBER ON THE CAP.
2. THE MONUMENT WELL SHALL BE BROOKS PRODUCTS No. 4TT, OR DEPARTMENT APPROVED EQUAL.
3. BRASS CAPS ARE AVAILABLE FOR PURCHASE FROM THE COUNTY DEPARTMENT OF PUBLIC WORKS.
4. CONCRETE COLLAR SHALL CONFORM TO STATE STANDARD SPECIFICATIONS, 565 LBS/CY CEMENTITIOUS MATERIAL [6 SACK].

DEPARTMENT OF PUBLIC WORKS - STANDARD DRAWINGS

STREET MONUMENT
FOR HMA PAVED ROADS

Issued: August 2022	Scale: NTS
Revised:	Revision No:
Drawing No: M-1	

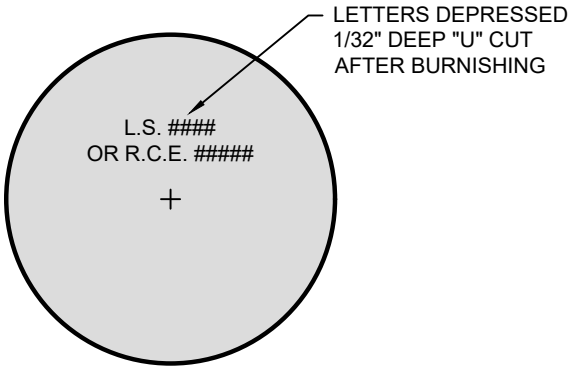

CAP PLAN

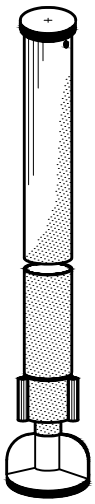

ISOMETRIC VIEW

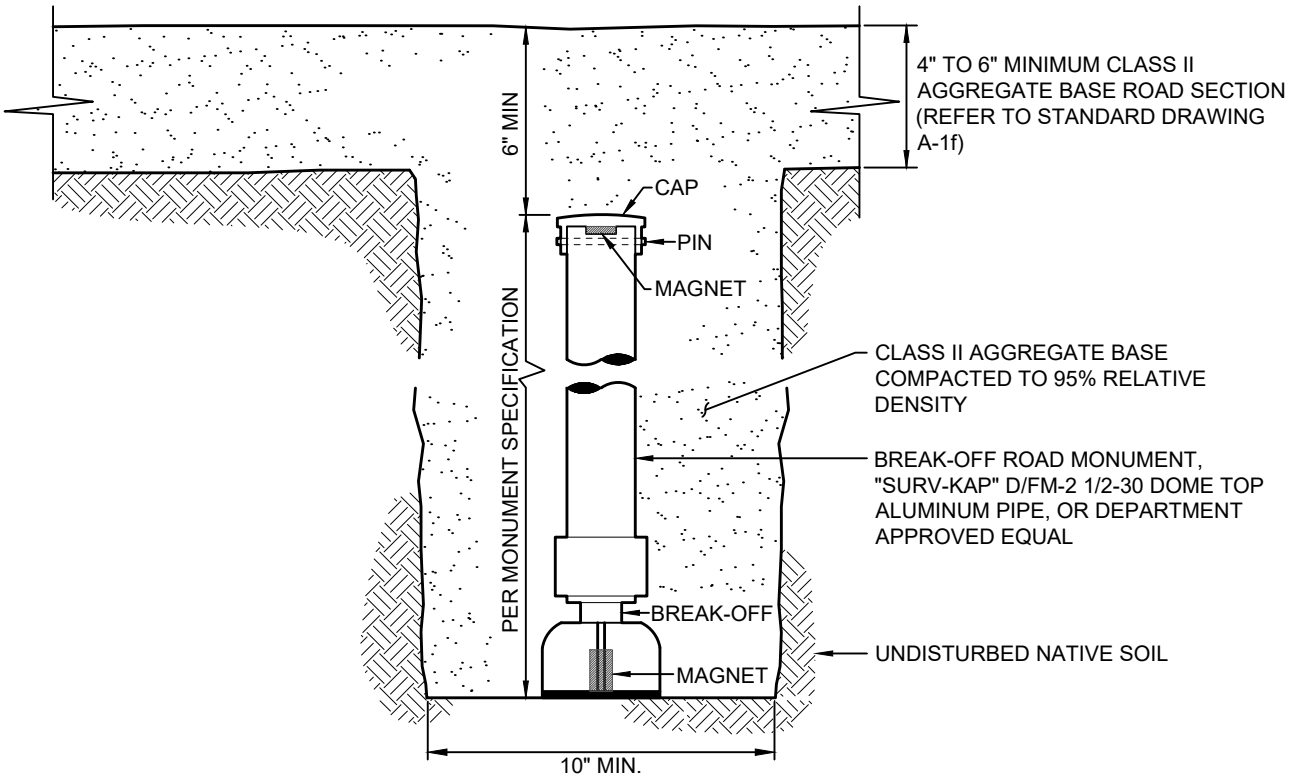

NOTES:

1. BREAK-OFF MONUMENTS ARE DESIGNED TO BREAK OFF AT A PRE-DETERMINED POINT, LEAVING A PORTION OF THE BASE CONTAINING THE MAGNET FOR RELOCATING THE ORIGINAL SURVEY POINT.
2. BREAK-OFF MONUMENTS MAY BE SPECIFIED TO MONUMENT CENTERLINE OF COUNTY RURAL GRAVEL ROADS (REFER TO STANDARD DRAWING A-1f).
3. NOT FOR USE IN PAVED ROADS (REFER TO STANDARD DRAWING M-1).

DEPARTMENT OF PUBLIC WORKS - STANDARD DRAWINGS

STREET MONUMENT
FOR GRAVEL ROADS

Issued:	Scale:
August 2022	NTS
Revised:	Revision No:
Drawing No:	M-1a

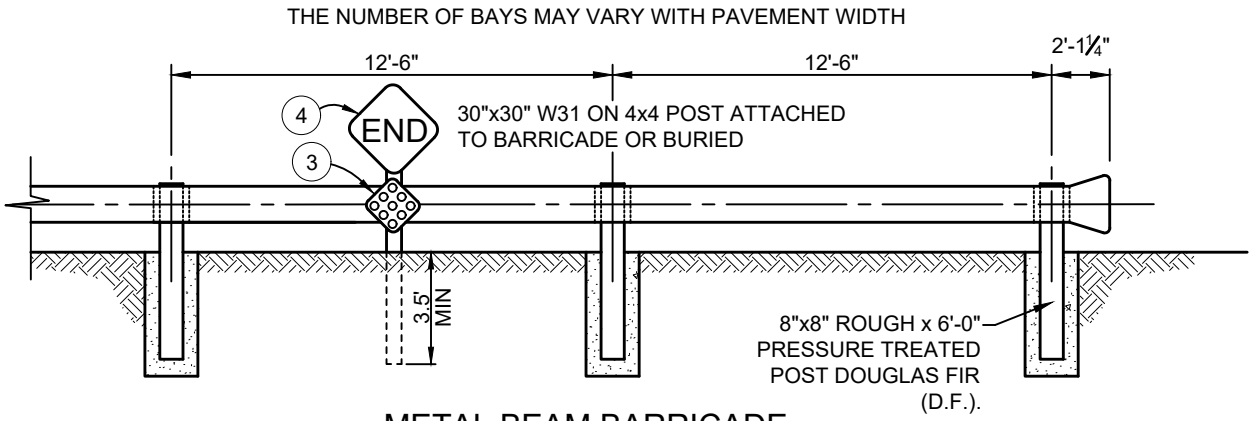

METAL BEAM BARRICADE

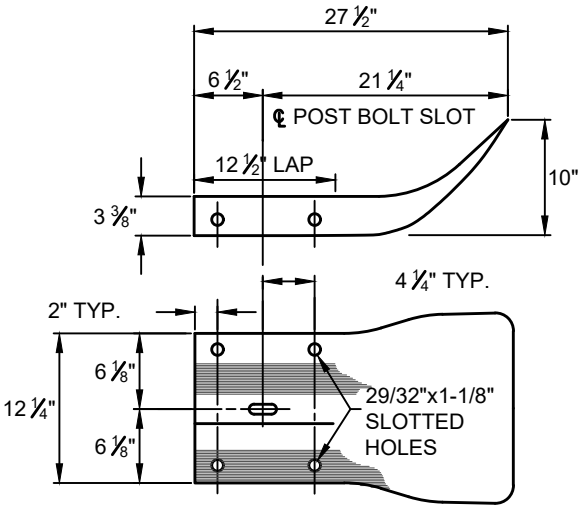

TERMINAL SECTION

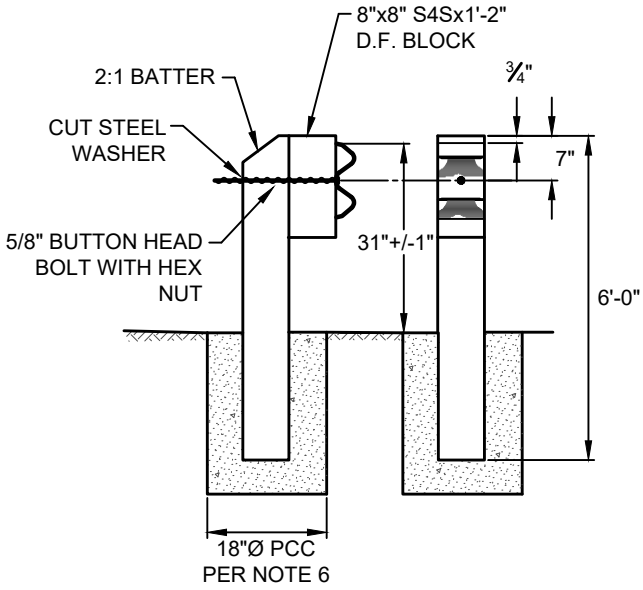

POST DETAIL

NOTES:

1. REFER TO STATE STANDARD SPECIFICATIONS FOR CURRENT GUARDRAIL STANDARDS.
2. USED ONLY WITH APPROVAL BY THE DEPARTMENT.
3. STANDARD "N2-RED RETROREFLECTIVE BACKGROUND WITH BLACK BORDER" MARKER TO BE BOLTED TO GUARD RAILING AS SHOWN.
4. 30"x30" W31 BOLTED TO 4x4 POST AND INSTALLED BEHIND BARRICADE PER STATE STANDARDS.
5. REFER TO STATE STANDARD SPECIFICATIONS AND CALIFORNIA MANUAL ON UNIFORM TRAFFIC CONTROL DEVICES FOR ADDITIONAL SIGNAGE REQUIREMENTS.
6. CONCRETE POST SET SHALL CONFORM TO STATE STANDARD SPECIFICATIONS, 520 LBS/CY CEMENTITIOUS MATERIAL [5 1/2 SACK].

DEPARTMENT OF PUBLIC WORKS - STANDARD DRAWINGS

ROAD BARRICADE

METAL BEAM

Issued:	Scale:
August 2022	NTS
Revised:	Revision No:
Drawing No:	M-2

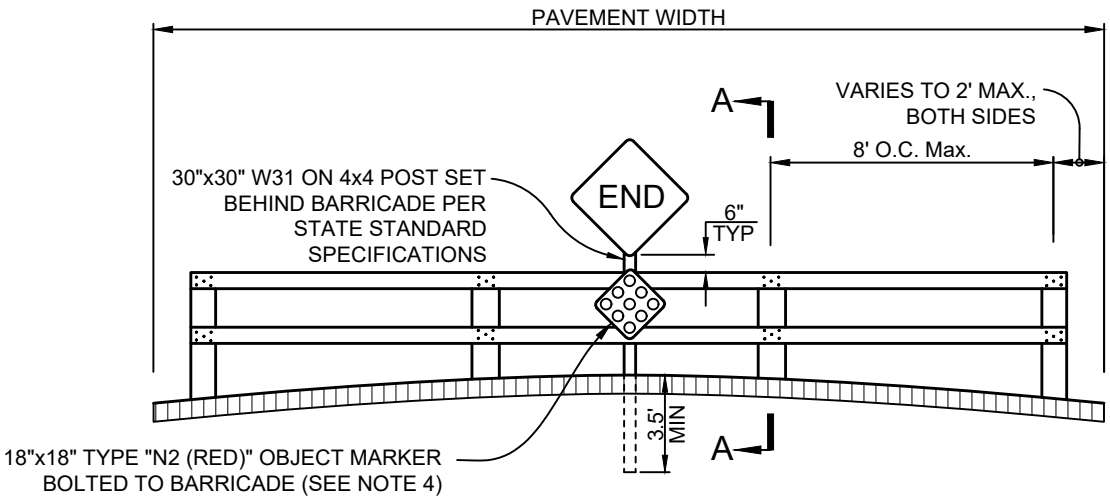

WOOD BEAM BARRICADE

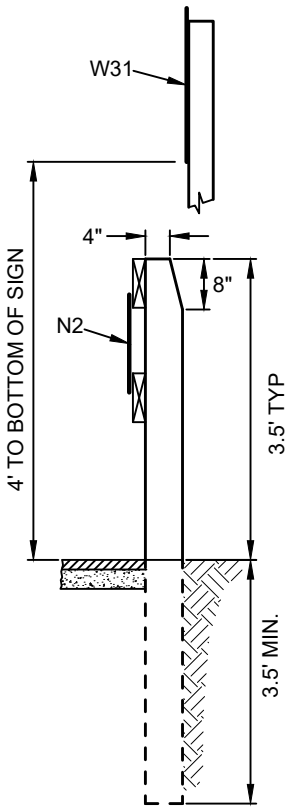

SECTION A-A

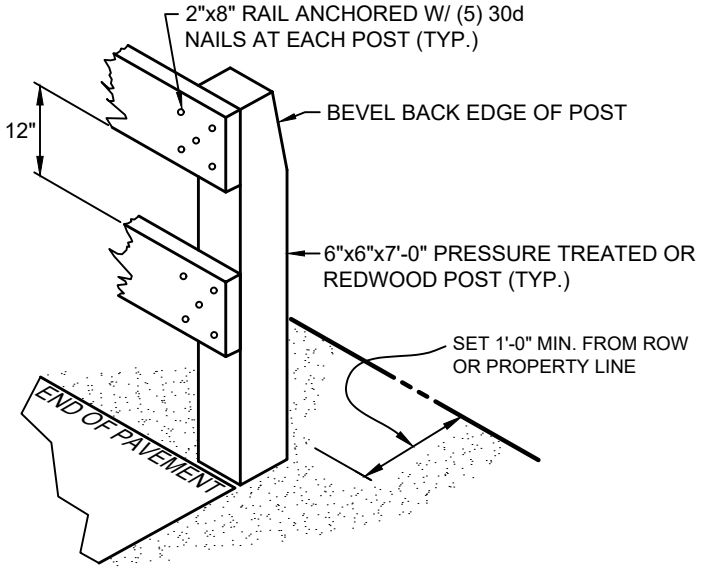

POST DETAIL

NOTES:

1. RAILS TO BE 2"x8" CLEAR DOUGLAS FIR S4S AND POSTS TO BE 6"x6"x7'-0" PRESSURE TREATED OR REDWOOD.
2. BUTT ALL RAIL JOINTS TO CENTER OF POST.
3. ALL EXPOSED WOOD SHALL BE PAINTED EXTERIOR WHITE, 2 COATS.
4. STANDARD "N2-RED RETROREFLECTIVE BACKGROUND WITH BLACK BORDER" MARKER TO BE LOCATED AS SHOWN (REFER TO STATE STANDARDS).
5. USED ONLY WITH THE APPROVAL OF THE DEPARTMENT WHERE BARRICADE WILL ONLY BE IN PLACE A MAXIMUM OF FIVE (5) YEARS.
6. REFER TO STATE STANDARD SPECIFICATIONS FOR W-31 SIGN, AND THE CALIFORNIA MANUAL ON UNIFORM TRAFFIC CONTROL DEVICES FOR ADDITIONAL SIGN REQUIREMENTS.

DEPARTMENT OF PUBLIC WORKS - STANDARD DRAWINGS

ROAD BARRICADE
TEMPORARY WOOD BEAM

Issued: August 2022	Scale: NTS
Revised:	Revision No:
Drawing No: M-2a	

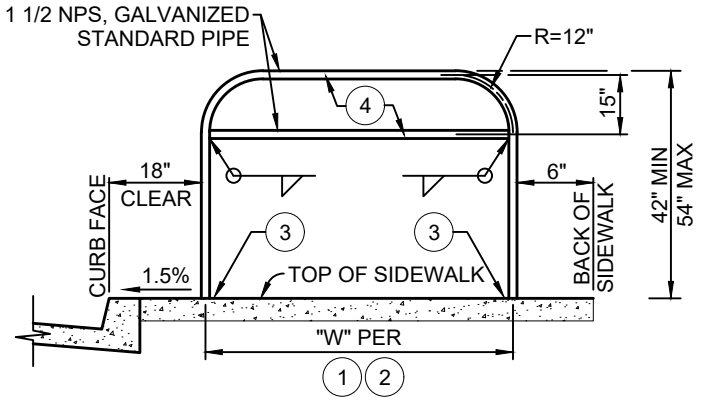

PEDESTRIAN BARRICADE

END OF SIDEWALK EXAMPLE

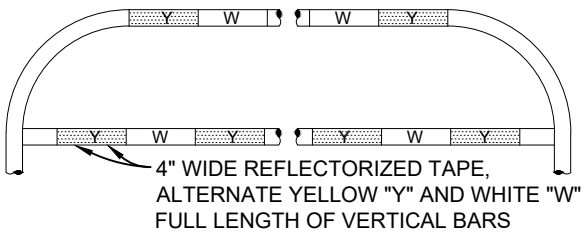

REFLECTIVE TAPING DETAIL

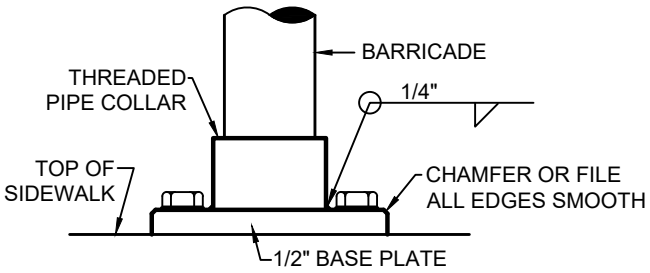

ELEVATION

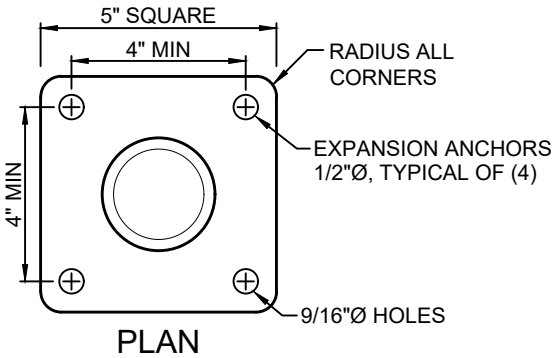

PLAN

POST ANCHOR DETAIL

FOR TEMPORARY INSTALLATIONS

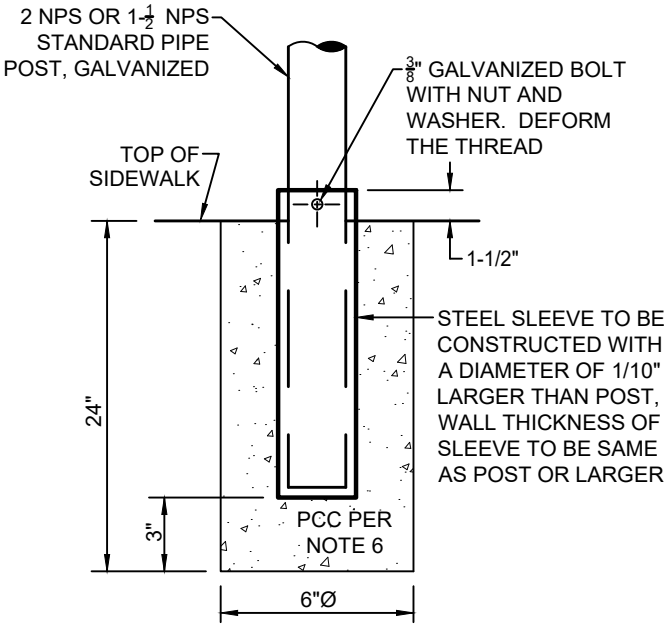

POST SLEEVE DETAIL

FOR PERMANENT INSTALLATIONS

NOTES:

1. FOR END OF SIDEWALK APPLICATIONS THE PIPE POST SHALL BE 18-INCHES BEHIND FACE OF CURB AND 6-INCH INSIDE BACK OF SIDEWALK. "W" VARIES BASED ON SIDEWALK WIDTH.
2. TO RESTRICT CROSSINGS AT INTERSECTIONS, THE BARRICADE SHALL BE 18-INCHES BEHIND CURB FACE, "W" SHALL BE 6-FEET (UNLESS NOTED OTHERWISE), AND SIGNAGE SHALL BE PROVIDED TO DIRECT PEDESTRIANS.
3. FOR TEMPORARY APPLICATIONS USE THE POST ANCHOR DETAIL FOR MOUNTING THE BARRICADE. FOR PERMANENT APPLICATIONS USE THE POST SLEEVE DETAIL.
4. WRAP BARRICADE RAILS WITH 4-INCH WIDE REFLECTIVE SAFETY TAPE, ALTERNATING YELLOW & WHITE PER DETAIL.
5. FOR MINIMUM PIPE DIAMETERS AND WALL THICKNESS, REFER TO ASTM A6M.
6. CONCRETE POST SET SHALL CONFORM TO STATE STANDARD SPECIFICATIONS, 520 LBS/CY CEMENTITIOUS MATERIAL [5 1/2 SACK].

DEPARTMENT OF PUBLIC WORKS - STANDARD DRAWINGS

SIDEWALK BARRICADE

Issued: August 2022	Scale: NTS
Revised:	Revision No:
Drawing No: M-3	

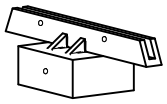

POST-TO-SIGN

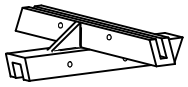

SIGN-TO-SIGN

STREET NAME SIGN BRACKET DETAILS

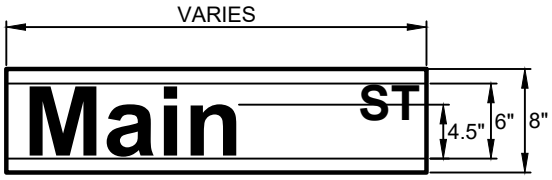

STREET NAME SIGN DETAIL

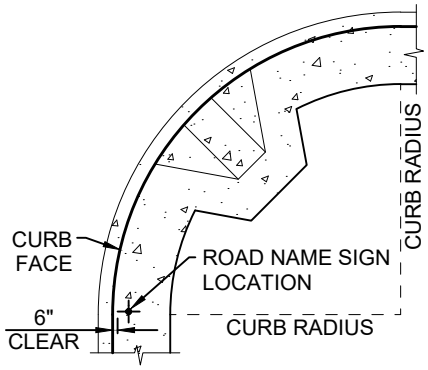

URBAN CONDITIONS

STREET SIGN PLACEMENT DETAIL

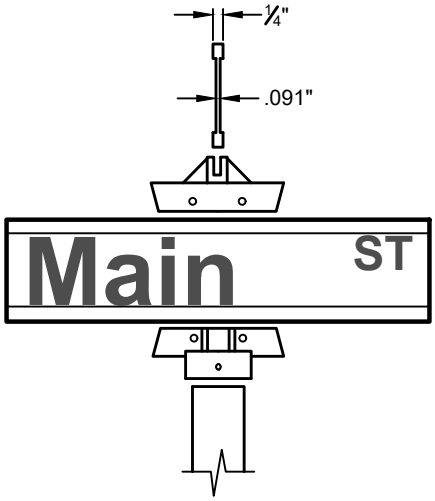

STREET NAME SIGN ASSEMBLY DETAIL

NOTES:

1. FOR COUNTY MAINTAINED ROADS, SIGN SHALL BE WHITE LETTERS ON A GREEN BACKGROUND. FOR ALL OTHER ROADS THE SIGN SHALL BE GREEN LETTERS ON A WHITE BACKGROUND.
2. CAPITAL LETTERS MUST BE 6-INCHES TALL, LOWER CASE LETTERS 4.5-INCHES TALL. ALL LETTERS TO BE DIE-CUT SILVER SCOTCHLITE, SERIES B.
3. STREET NAME SIGN BLADES TO BE EXTRUDED ALUMINUM, 6063-T6 ALLOY, DEGREASED AND ETCHED WITH GREEN SCOTCHLITE APPLIED TO BOTH SURFACES.
4. POST-TO-SIGN BRACKET TO BE DIE-CAST, #360 ALLOY UNIVERSAL POST CAP WITH TWO ANGLED GUSSETS EACH SIDE, TO FIT 2"x2" 14 GAUGE PERFORATED TELESPAR POST WITH 2.5"x2.5"x30" 7 GAUGE HEAVY DUTY ANCHOR. SIGN-TO-SIGN BRACKET TO BE SIMILAR CONSTRUCTION WITH 90° AND 45° SEPARATION.
5. SCREWS FOR SECURING BRACKETS TO BE ZINC PLATED HEX SOCKET HEAD SCREWS 1/4"x1/2".

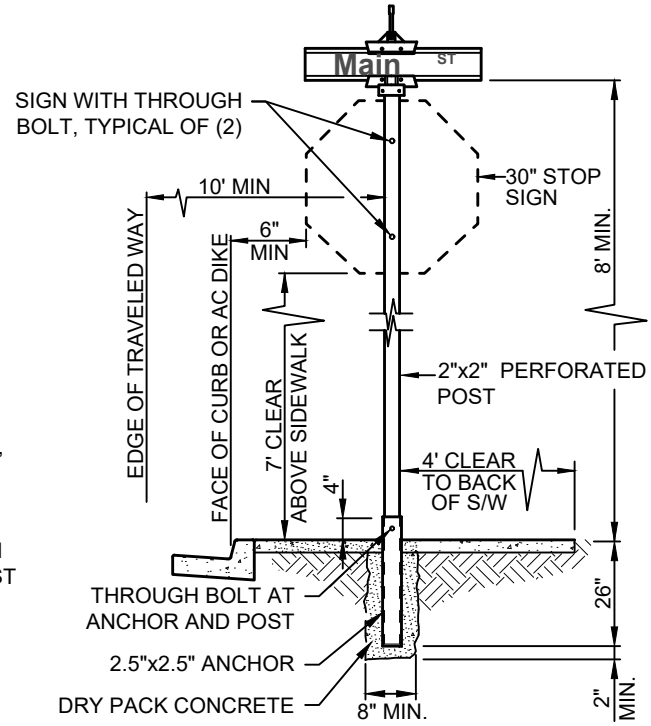

SIGN INSTALLATION

DEPARTMENT OF PUBLIC WORKS - STANDARD DRAWINGS

URBAN STREET SIGN

Issued: August 2022	Scale: NTS
Revised:	Revision No:
Drawing No: M-4	

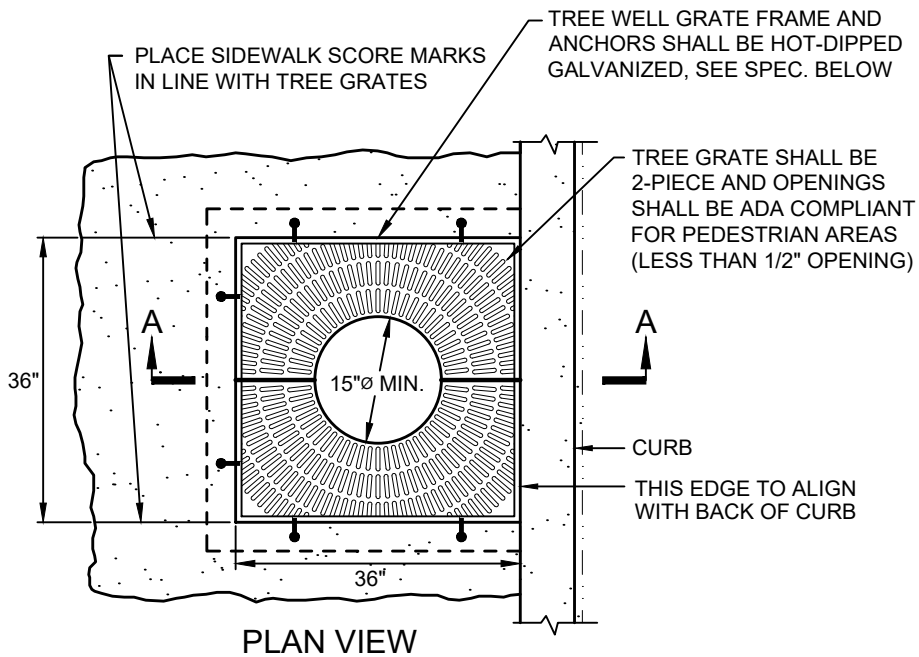

PLAN VIEW

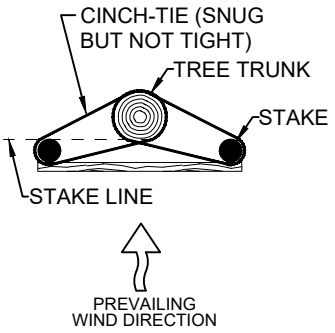

CINCH-TIE DETAIL

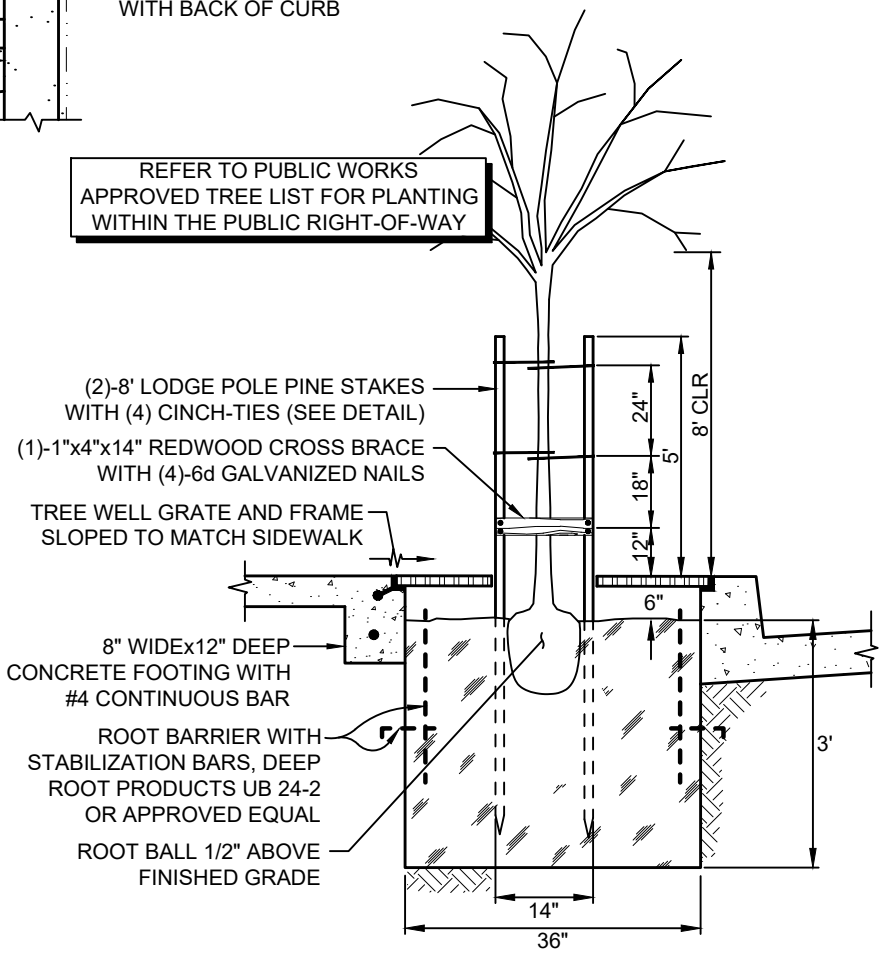

SECTION A-A

NOTES:

1. AN ENCROACHMENT PERMIT SHALL BE REQUIRED FOR ALL PLANTINGS WITHIN THE PUBLIC RIGHT-OF-WAY. THE PERMIT SHALL DEFINE RESPONSIBILITY FOR MAINTENANCE AND REMOVAL IF REQUIRED.
2. TREES SHALL BE SPACED A MIN. OF 25-FEET APART AS DIRECTED BY ENCROACHMENT PERMIT, TREES SHALL BE AT LEAST 50-FEET FROM CURB RETURNS, ALL TRAFFIC SIGNALS AND SIGNS SHALL REMAIN VISIBLE.
3. TREE SIZE TO BE COMPARABLE TO STANDARD 24-INCH BOX TREE, NURSERY STOCK.
4. TREES ARE TO BE SELECTED FROM A LIST OF THOSE APPROVED BY DEPARTMENT OF PUBLIC WORKS.
5. BACKFILL HOLE WITH 50/50 MIX OF COMMERCIAL PLANTING MIX AND NATIVE SOIL. LOOSEN ROOT BALL, TAMP SOIL TO ELIMINATE AIR SPACES, AND WATER SLOWLY TO PENETRATE ROOT BALL.
6. INSTALL DUCTILE CAST IRON TREE WELL GRATES, 36-INCH SQUARE WITH MINIMUM 15-INCH DIAMETER CENTER OPENING.
7. INSTALL PERIMETER ROOT BARRIER WITH A MINIMUM DEPTH OF 24-INCH FROM FINISH GRADE.
8. MAINTENANCE IS THE RESPONSIBILITY OF THE FRONTING PROPERTY OWNER. RESPONSIBILITY MUST BE TRANSFERRED TO SUBSEQUENT OWNERS BY TITLE. THE TREE SHALL BE REMOVED BY PROPERTY OWNER IF DIRECTED BY THE DEPARTMENT.
9. ONLY FOR USE IN 10-FEET WIDE SIDEWALK OR WHERE MATURE TREE WILL NOT INTERFERE WITH PEDESTRIAN ACCESSIBILITY.

GRATE AND FRAME SPECIFICATIONS:

1. OLYMPIC FOUNDRY STA 36 w/ CI STYLE GALVANIZED FRAME WITH ANCHORS, OR NEENAH FOUNDRY R8704-A DUCTILE CAST IRON GRATE AND GALVANIZED FRAME WITH ANCHORS, OR DEPARTMENT APPROVED EQUAL.
2. ALL GRATES SHALL BE COMPLIANT WITH THE CURRENT ADA REQUIREMENTS.

DEPARTMENT OF PUBLIC WORKS - STANDARD DRAWINGS

TREE
PLANTING IN RIGHT-OF-WAY

Issued: August 2022	Scale: NTS
Revised:	Revision No:
Drawing No: M-5	

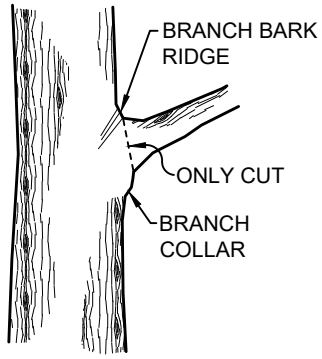

SMALL LIMB

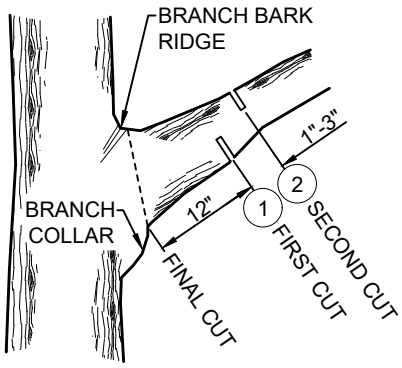

LARGE LIMB

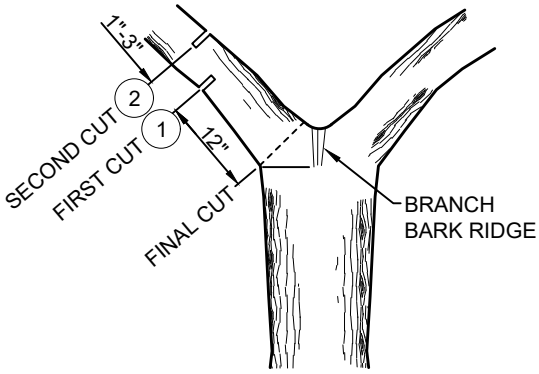

CO-DOMINANT STEM

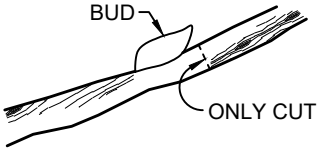

BRANCHES

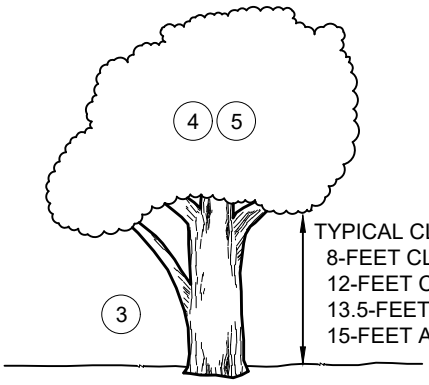

TYPICAL CLEARANCES:
8-FEET CLEAR ABOVE SIDEWALKS
12-FEET CLEAR ABOVE MULTIUSE TRAILS
13.5-FEET CLEAR ABOVE ACCESS ROADS (CAL FIRE)
15-FEET ABOVE COUNTY MAINTAINED ROADS

NOTES:

1. FIRST CUT SHOULD BE TO A DEPTH OF 1/3 THE BRANCH DIAMETER.
2. SECOND CUT, LIMB SHOULD SPLIT AWAY CLEANLY.
3. REMOVAL OF LARGER LOWER BRANCHES SHOULD BE MINIMIZED TO AVOID:
   A. MAKING THE TREE TOP HEAVY AND MORE SUSCEPTIBLE TO "BLOW OVERS".
   B. REDUCING THE NUMBER OF LARGE BRANCH CUTS MINIMIZES TREE SUSCEPTIBILITY TO DISEASE.
   C. PROVIDE WILDLIFE SHELTER.
   D. RETAIN GROUND SHADE TO MAINTAIN SOIL MOISTURE UNDER THE TREE.
   E. RETAIN THE NATURAL SHAPE OF THE TREE.
4. REMOVAL OF THE CANOPY BRANCHES SHOULD BE DONE IN A SYMMETRICAL MANNER SO AS NOT TO UNBALANCE THE TREE.
5. TO MINIMIZE STRESS TO THE TREE LIMIT THE AMOUNT OF TRIMMING DONE IN ONE SEASON TO:
   A. 10% OF CANOPY FOR OAK TREES.
   B. 25% OF CANOPY FOR OTHER SPECIES.
6. 1/3 RULE:
   A. NEVER REMOVE MORE THAN 1/3 OF A TREES CROWN.
   B. ENCOURAGE SIDE BRANCHES THAT FORM ANGLES THAT ARE 1/3 OFF THE VERTICAL, THE 10:00 AND 2:00 O'CLOCK POSITIONS.
   C. FOR MOST DECIDUOUS TREES, DON'T PRUNE UP FROM THE BOTTOM ANY MORE THAN 1/3 OF THE TREE'S TOTAL HEIGHT.
7. AFTER PRUNING, IT IS NOT NECESSARY TO USE A WOUND DRESSING. WOUND DRESSINGS HAVE NOT BEEN SHOWN TO IMPROVE THE RECOVERY OF THE TREE, AND IN SOME CASES DO ACTUAL DAMAGE TO THE TREE.
8. TREE TRIMMING SHOULD OCCUR ONLY OCCUR DURING THE DRY SEASON AND AT THE DIRECTION OF THE PROJECT ARBORIST.
9. ALL WORK SHALL BE DONE IN ACCORDANCE WITH RECOGNIZED STANDARDS OF GOOD ARBORICULTURAL PRACTICES.
10. THOROUGHLY CLEAN EQUIPMENT PRIOR TO COMMENCING WORK AND BETWEEN TRIMMING SEPARATE TREES.
11. TREE TRIMMING: ABUTTING PROPERTY OWNERS MAY SECURE AN ENCROACHMENT PERMIT TO HIRE A LICENSED, BONDED AND INSURED TREE COMPANY TO TRIM TREES WITHIN THE COUNTY RIGHT-OF-WAY, AT THEIR OWN EXPENSE. TREES WILL BE TRIMMED AS APPROVED BY THE PUBLIC WORKS DEPARTMENT ENCROACHMENT PERMIT ENGINEER.

DEPARTMENT OF PUBLIC WORKS - STANDARD DRAWINGS

TREE TRIMMING METHODS

Issued:	Scale:
August 2022	NTS
Revised:	Revision No:
Drawing No:	M-5a

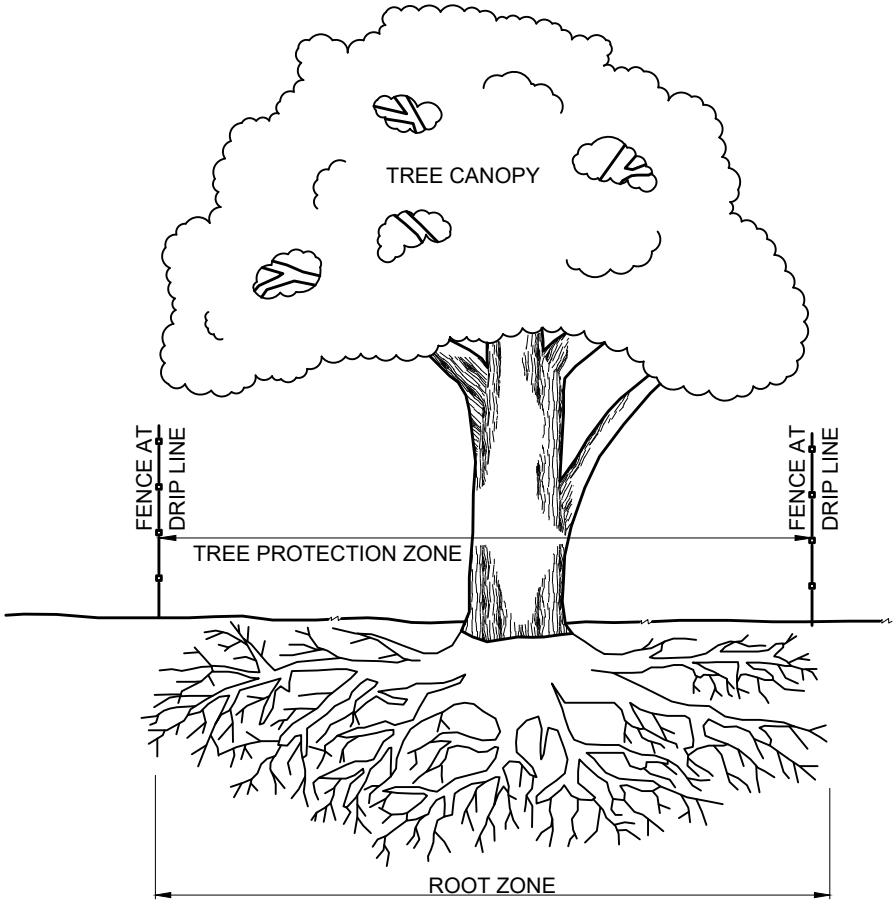

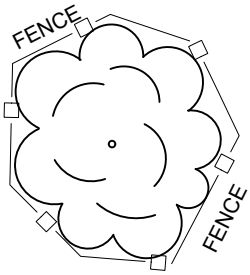

SINGLE TREE APPLICATION

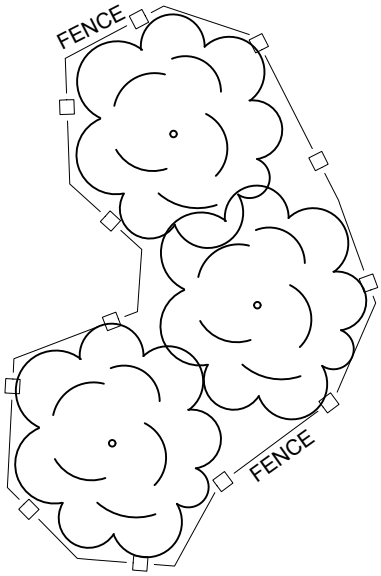

MULTIPLE TREE APPLICATION

NOTES:

1. PRIOR TO THE START OF ANY CLEARING, GRADING, OR OTHER CONSTRUCTION ACTIVITIES TREE PROTECTION FENCING SHALL BE INSTALLED AROUND ALL TREES IDENTIFIED TO BE PROTECTED, OR THAT MAY BE IMPACTED, AND AT ALL TREES WITHIN 50-FEET OF WORK ACTIVITIES.
2. TREE PROTECTION FENCING SHALL BE ERECTED AT THE EDGE OF THE TREE DRIP LINE TO PROTECT THE TREE ROOT ZONE.
3. TREE PROTECTION FENCING SHALL BE ORANGE PLASTIC "SNOW FENCING" OR APPROVED EQUAL INSTALLED PER MANUFACTURER'S RECOMMENDATIONS WITH POST SPACING OF NO MORE THAN 12-FEET.
4. TREE PROTECTION FENCING SHALL BE MAINTAINED IN PLACE THROUGH TO PROJECT COMPLETION AND CLEAN-UP.

DEPARTMENT OF PUBLIC WORKS - STANDARD DRAWINGS

TREE PROTECTION FENCING

Issued:	Scale:
August 2022	NTS
Revised:	Revision No:
Drawing No:	M-5b

TREE PLANTING LIST

BOTANICAL NAME	COMMON NAME	DROUGHT TOLERANT	HEIGHT	SPREAD	EVER-GREEN	CLIMATE ZONE	WATER USE
RHUS LANCEA	AFRICAN SUMAC		25'	20-25'	Y	8,9,12-24	LOW
ACACIA BAILEYANA	BAILEY ACACIA		20-30'	20-40'	Y	7-9,13-24	LOW
QUERCUS DOUGLASII	BLUE OAK	Y	50'		N	ALL	VERY LOW
CERCIDIUM (PARKINSONIA) FLORIDUM	BLUE PALO VERDE	Y	30-35'	30'	N	10-14,18-20	VERY LOW
BRACHYCHITON POPULNEUS	BOTTLE TREE	Y	30-50'	30'	Y	12-24	LOW
TRISTANIA (LOPHOSTEMON) CONFERTUS	BRISBANE BOX	Y	30-60'	30-45'	Y	15-24	MODERATE
UMBELLULARIA CALIFORNICA	CALIFORNIA BAY/LAUREL	Y	65-75'		Y	4-10,12-24	MODERATE
QUERCUS KELLOGGII	CALIFORNIA BLACK OAK	N	30-80'		N	5-7,15,16, 18-21	LOW
CINNAMOMUM CAMPHORA	CAMPHOR TREE	Y	50-65'	50'+	Y	8,9, 12-24	MODERATE
QUERCUS CHRYSOLEPIS	CANYON LIVE OAK	N	20-65'		Y	5-9,14-24	VERY LOW
CALODENDRUM CAPENSE	CAPE CHESTNUT	N	25-40'		N	(15,16) 19, 21-24	LOW
CUPANIOPSIS ANACARDIOIDES	CARROTWOOD	Y	35-40'		Y	16-24	MODERATE
LYONOTHAMNUS FLORIBUNDUS	CATALINA IRONWOOD	Y	30-60'	20-40'	Y	15-17,19-24	LOW
MELIA AZEDARACH	CHINABERRY	Y	50'		N		VERY LOW
ZIZIPHUS JUJUBA	CHINESE JUJUBE	Y	20-30'		N	7-16,18-24	LOW
QUERCUS AGRIFOLIA	COAST LIVE OAK	Y	20-70'	40-70'	Y	7-10,12,14-24	VERY LOW
CELTIS OCCIDENTALIS	COMMON HACKBERRY	Y	50-70'		N	ALL	LOW
QUERCUS SUBER	CORK OAK	Y	70-100'		Y	5-16,18-23	LOW
CEDRUS DEODORA	DEODAR CEDAR	N	80'+	35-50'	Y	2-12,14-24	LOW
BRACHYCHITON ACERIFOLIUS	FLAME TREE	Y	60'+		N	16-21, 23	LOW
CHORISIA SPECIOSA	FLOSS SILK TREE	Y	30-65'			15-24	LOW-MODERATE
MORUS ALBA 'STRIBLING'	FRUITLESS MULBERRY	N	20-60'		N	ALL	MODERATE
QUERCUS GARRYANA	GARRY OAK, OREGON WHITEOAK	Y	40-90'		N	4-6,15-17	LOW
KOELREUTERIA PANICULATA	GOLDENRAIN TREE	Y	20-35'	10-40'	N	2-21	MODERATE
ANGOPHORA COSTATA	GUM MYRTLE	N	40-50'	40-50'	Y	16, 17, 21-24	LOW
QUERCUS ILEX	HOLLY OAK	Y	40-70'	50'	Y	4-24	LOW
CALOCEDRUS DECURRENS	INCENSE CEDAR		75-90'		Y	1-12,14-24	MODERATE
QUERCUS WISLIZENII	INTERIOR LIVE OAK	Y	30-75'		Y	7-9,14-16, 18-21	VERY LOW
SOPHORA JAPONICA	JAPANESE PAGODA TREE	N	20-50'	25-35'	N	ALL	LOW
PARKINSONIA ACULEATA	JERUSALEM THORN	Y	15-30'		N	11-24	VERY LOW
CERCIDIUM MICROPHYLLUM	LITTLE LEAF PALO VERDE	Y	30-35'	30'	N	10-14,18-20	VERY LOW
PLATANUS ACERIFOLIA	LONDON PLANE TREE	N	40-80'	65-80'	N	2-24	MODERATE
ERIOBOTRYA JAPONICA	LOQUAT		15-35'		Y	4-24	LOW
ARBUTUS MENZIESII	MADRONE	Y	20-100'		Y	3-7,14-19	LOW
GINKGO BILOBA 'FAIRMONT'	MAIDENHAIR TREE	N	70-80'		N	1-9,14-24	MODERATE
MAYTENUS BOARIA	MAYTEN TREE	N	30-50'	15-20'	Y	8,9,14-21	MODERATE
QUERCUS ENGELMANNII	MESA OAK		50-60'		N	18-24	LOW
AGONIS FLEXUOSA	PEPPERMINT TREE	N	25-35'	15-30'	Y	15-17,20-24	LOW
HAKEA PETIOLARIS	PINCUSHION TREE, SEA URCHIN		6-25'		Y		
CASUARINA CUNNINGHAMIANA	RIVER SHE OAK	Y	70'		Y	8,9,12-24	LOW
ZELKOVA SERRATA	SAWLEAF ZELKOVA	N	60'	50-60'	N	3-24	MODERATE
LIQUIDAMBAR STYRACIFLUA	SWEET GUM	N	60'+		N	1-11,14-24	MODERATE
LITHOCARPUS DENSIFLORUS	TANBARK OAK		60-90'		Y	4-7,14-24	LOW
TIPUANA TIPU	TUPU TREE	N	25-50'		N	12-16,18-24	MODERATE
QUERCUS LOBATA	VALLEY OAK	Y	70'+		N	1-3.6-16,18-21	LOW
CATALPA SPECIOSA	WESTERN CATALPA	N	40-70'		N	ALL	LOW

NOTE:
1. ALTERNATE TREE SPECIES ARE SUBJECT TO DEPARTMENT OF PUBLIC WORKS APPROVAL.

NOTE: STORM DRAIN MARKERS ARE AVAILABLE FOR PURCHASE FROM THE COUNTY OF SAN LUIS OBISPO DEPARTMENT OF PUBLIC WORKS. CALL 781-5252 FOR ADDITIONAL INFORMATION.

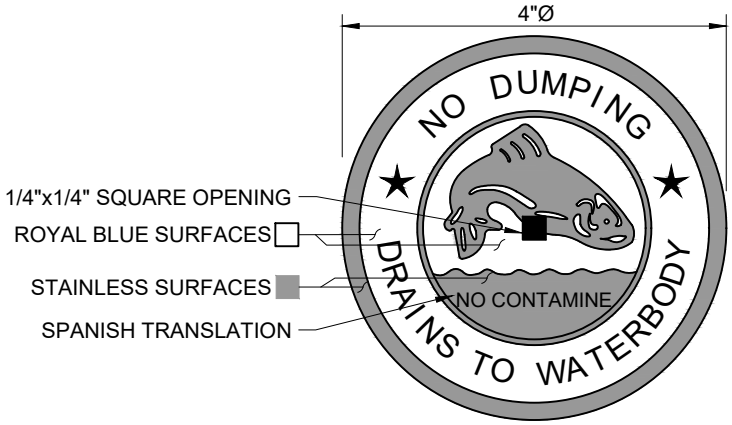

MATERIAL:
300 SERIES ANNEALED STAINLESS STEEL WITH ROLLED DOWN EDGES AND 1/4"x1/4" SQUARE MOUNTING HOLE.
THICKNESS 0.062" / WEIGHT 0.218 LBS.

FINISH:
UV BAKED ENAMEL, ROYAL BLUE DEPRESSED COLOR SAND BLASTED FRONT AND REAR FOR PAINT AND ADHESIVE BONDING.

PLACEMENT:
LOCATE AS SHOWN ON D-2 SERIES DRAWINGS.

MARKER (TOP VIEW)

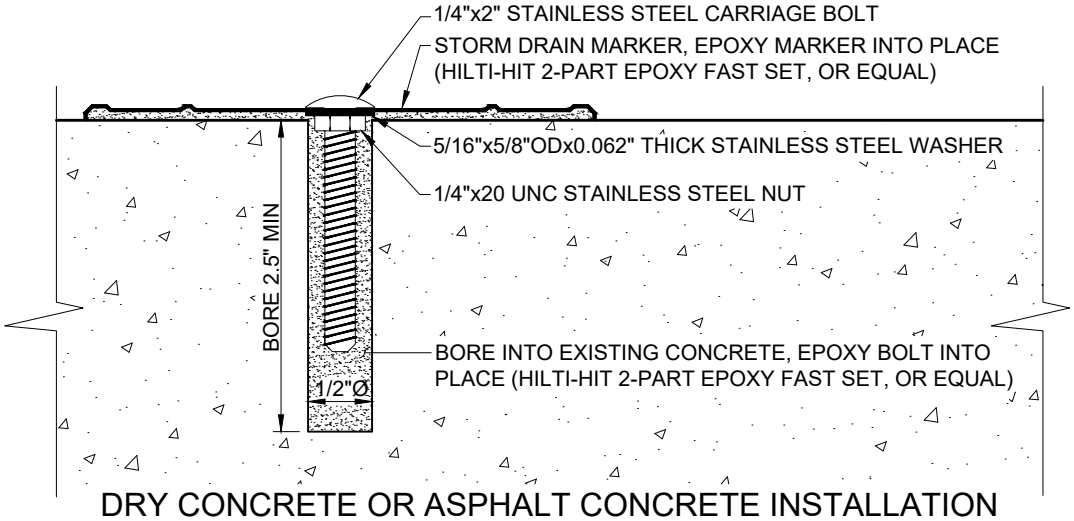

DRY CONCRETE OR ASPHALT CONCRETE INSTALLATION

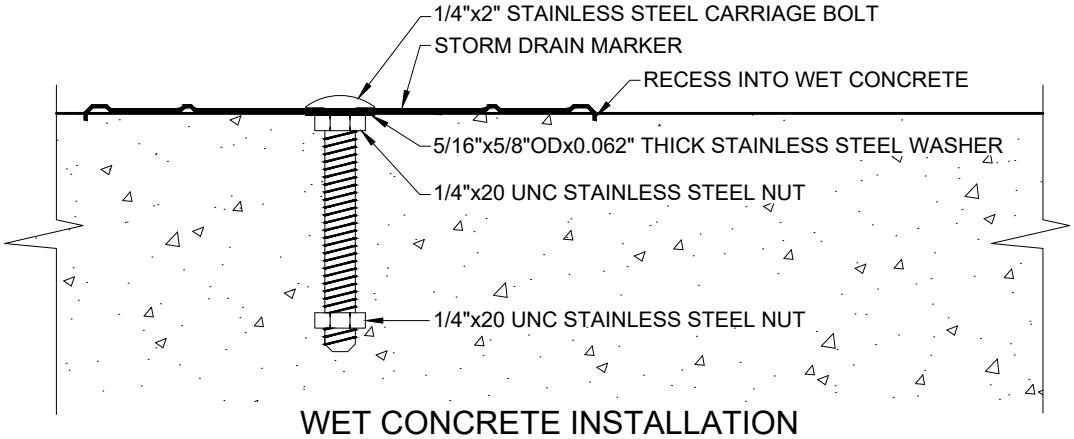

WET CONCRETE INSTALLATION

DEPARTMENT OF PUBLIC WORKS - STANDARD DRAWINGS

STORM DRAIN MARKER

Issued: August 2022	Scale: NTS
Revised:	Revision No:
Drawing No: M-6	

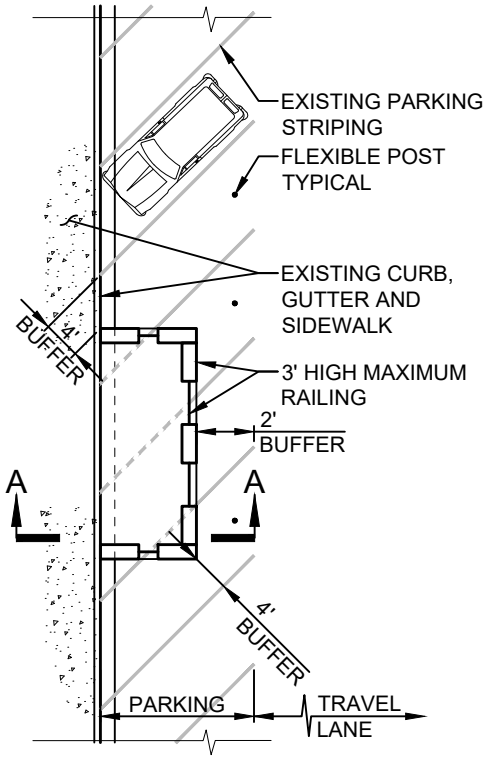

ANGLED PARKING

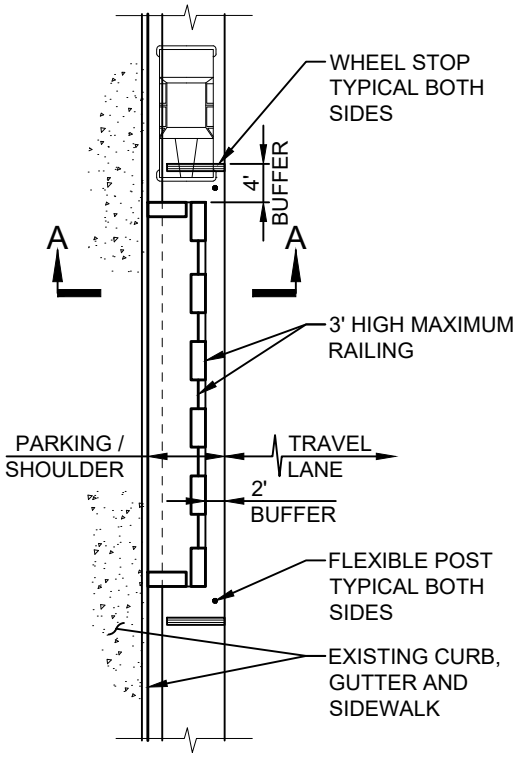

PARALLEL PARKING

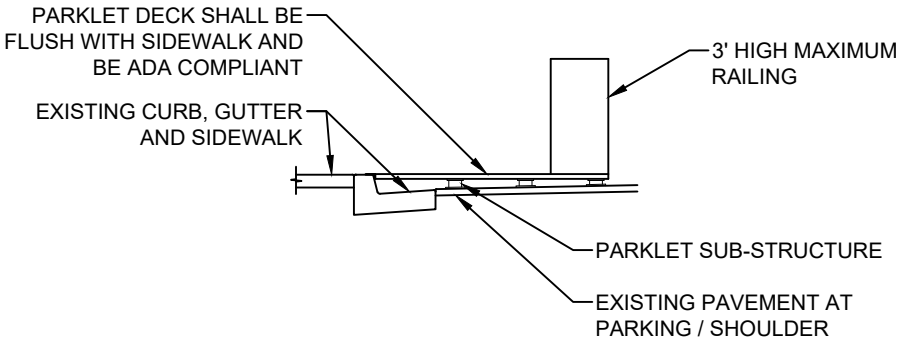

SECTION A-A

1"=5'

NOTES:

1. PARKLET SUB-STRUCTURE SHALL NOT BE LOCATED WITHIN CONCRETE GUTTER AND/OR SWALE SO THAT DRAINAGE FLOW IS MAINTAINED.
2. PARKLET SHALL BE COMPLIANT WITH ADA STANDARDS, INCLUDING BUT NOT LIMITED TO MAINTAINING A MINIMUM 4-FEET CLEAR PATH OF TRAVEL, PROVIDING SMOOTH TRANSITION OF PARKLET AT SIDEWALK, 2% MAXIMUM SLOPE, ETC.
3. RAILING SHALL BE CAPABLE OF WITHSTANDING AT LEAST 200 LBS. OF HORIZONTAL FORCE.
4. PARKLET MAY BE SUBJECT TO REVIEW AND APPROVAL BY PLANNING & BUILDING, ENVIRONMENTAL HEALTH, COUNTY FIRE, ETC.
5. PARKLET LOCATION IS SUBJECT TO DEPARTMENT OF PUBLIC WORKS APPROVAL.

DEPARTMENT OF PUBLIC WORKS - STANDARD DRAWINGS

PARKLETS
ANGLED AND PARALLEL PARKING

Issued: August 2022	Scale: 1"=20'
Revised:	Revision No:
Drawing No: M-7	

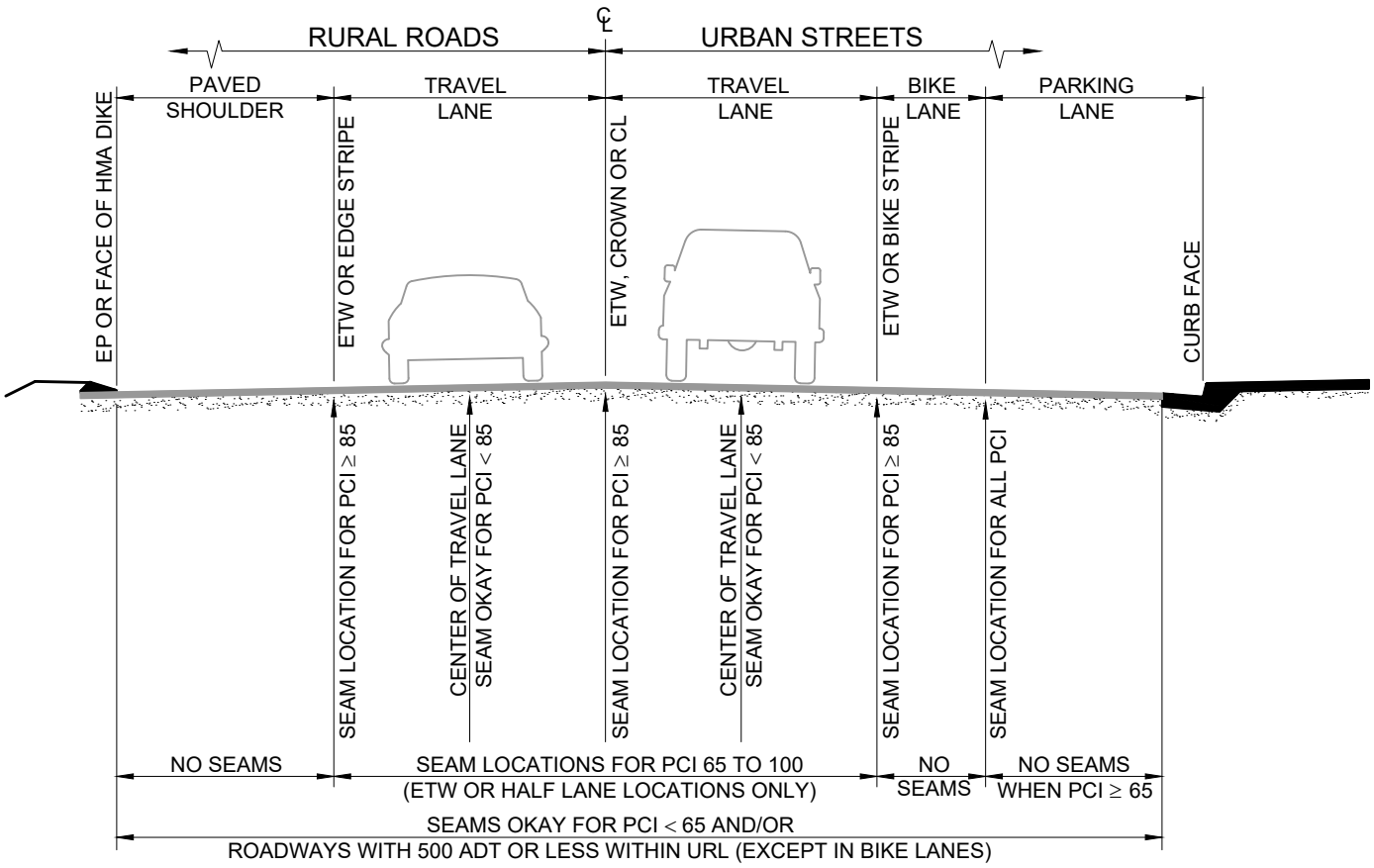

SECTION VIEW: ALLOWABLE PAVEMENT SEAM LOCATIONS

BASED ON ROAD PCI & ADT AS PROVIDED BY THE DEPARTMENT

PCI	Roadways with 500 ADT or less and within the URL	All Other Roadways
85-100	Full Lane Width Overlay	Full Lane Width Overlay
65-84	12" min. T-Section	Half Lane Width Overlay
<65	12" min. T-Section	12" min. T-Section

MINIMUM PAVEMENT REPAIR LIMITS

ADT = AVERAGE DAILY TRAFFIC, AS PROVIDED BY THE DEPARTMENT
PCI = PAVEMENT CONDITION INDEX, AS PROVIDED BY THE DEPARTMENT
ETW - EDGE OF TRAVELED WAY; OL - OVERLAY; URL - URBAN RESERVE LINE

NOTES:

1. SEAM LOCATIONS MAY BE ADJUSTED BY THE DEPARTMENT BASED ON FIELD CONDITIONS.
2. IN ALL CASES THE EXISTING PAVEMENT SHALL BE SAWCUT ALONG A CLEAN LINE AND SHALL BE EITHER LONGITUDINAL OR TRANSVERSE TO THE TRAVEL LANE. NO LONGITUDINAL SEAMS SHALL BE ALLOWED WITHIN ANY BIKE LANE.
3. ALL SAWCUT EDGES SHALL BE VERTICAL, WITH SQUARE CORNERS, AND SHALL BE STRAIGHT AND NEAT IN APPEARANCE.
4. ROTOMILLING OR GRINDING MAY BE UTILIZED IN PLACE OF SAWCUT WHEN APPROVED IN ADVANCE OF THE WORK BY THE DEPARTMENT.
5. SEE R-2 SERIES DRAWING FOR RURAL ROAD AND URBAN STREET WIDENING SAWCUT REQUIREMENTS. SEE R-3 SERIES DRAWINGS FOR UTILITY TRENCHING SAWCUT REQUIREMENTS.
6. A TACK COAT SHALL BE APPLIED TO ALL HORIZONTAL AND VERTICAL SAWCUT CONFORM SURFACES PRIOR TO PAVING.
7. AFTER PAVING, SS1H OIL (OR APPROVED EQUAL) SHALL BE APPLIED TO ALL HMA SURFACE SEAMS PER MANUFACTURER'S RECOMMENDATIONS.

DEPARTMENT OF PUBLIC WORKS - STANDARD DRAWINGS

PAVEMENT RESTORATION REQUIREMENTS

Issued: August 2022	Scale: NTS
Revised:	Revision No:
Drawing No: R-1	

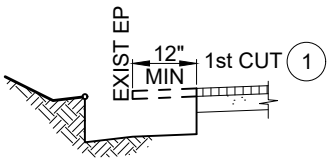

STEP 1: SAWCUT PER NOTE 1 AND REMOVE MATERIAL TO REQUIRED DEPTH.

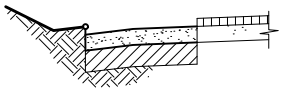

STEP 2: CONSTRUCT NEW SUBGRADE & BASE PER DEPARTMENT APPROVED SECTION.

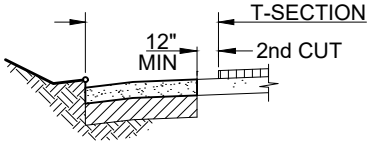

STEP 3: SAWCUT PER NOTE 1 TO REMOVE AN ADDITIONAL 12" MIN OF HMA SURFACE.

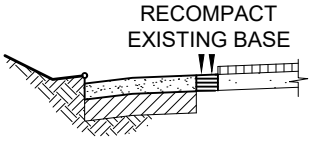

STEP 4: RECOMPACT EXISTING BASE SECTION TO 95% RELATIVE COMPACTION.

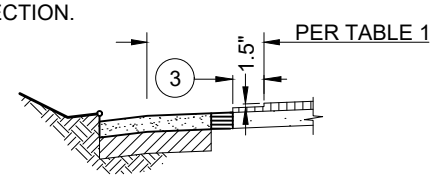

STEP 5: GRIND 1.5" (MIN) EXISTING ASPHALT SURFACE SO FINAL SEAMS ARE LOCATED PER DRAWING No R-1.

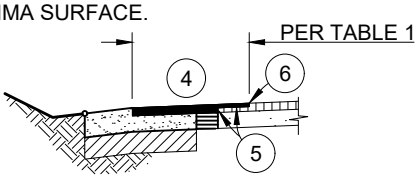

STEP 6: PAVE ROADWAY PER DEPARTMENT APPROVED SECTION.

WIDENING PROCEDURE

Table 1: Minimum Pavement Width Repair Limits (see R-1)

PCI	Roadways with 500 ADT or less and within the URL	All Other Roadways
85-100	Full Lane Width Overlay	Full Lane Width Overlay
65-84	12" min. T-Section	Half Lane Width Overlay
<65	12" min. T-Section	12" min. T-Section

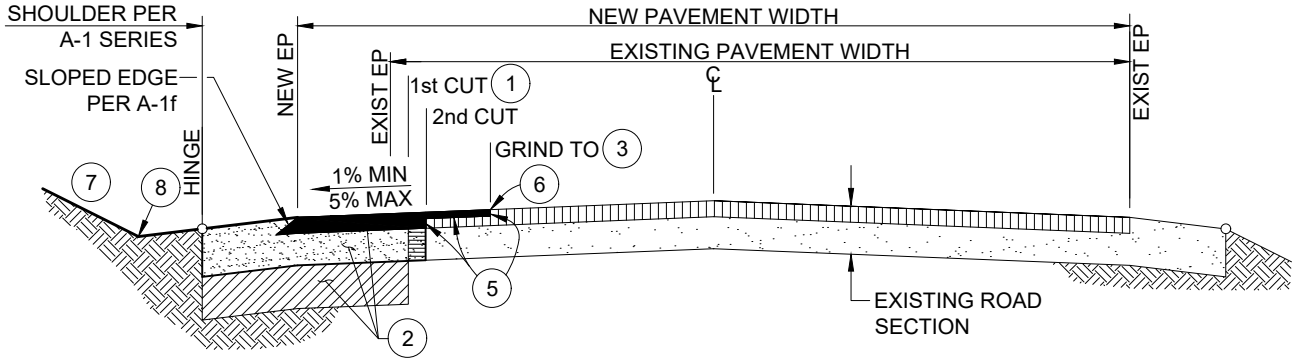

TYPICAL RURAL ROAD WIDENING SECTION

NOTES:

1. SAWCUT TO REMOVE DAMAGED OR FAILED PAVEMENT SECTION ADJACENT TO THE EDGE OF PAVEMENT AS NECESSARY TO PROVIDE A CLEAN JOIN LINE. ALL SAWCUTS SHALL BE PERPENDICULAR OR TRANSVERSE TO THE TRAVEL LANE. CUT EDGES SHALL BE VERTICAL WITH SQUARE CORNERS AND SHALL BE STRAIGHT AND NEAT IN APPEARANCE.
2. THE STRUCTURAL ROAD WIDENING SECTION SHALL BE DETERMINED AT THE TIME OF CONSTRUCTION BASED ON THE SUBGRADE R-VALUE AND THE TRAFFIC INDEX (TI) AS PROVIDED BY THE DEPARTMENT. IF THE EXISTING ROAD STRUCTURAL SECTION IS GREATER THAN THE DETERMINED ROAD STRUCTURAL SECTION, THEN THE EXISTING STRUCTURAL SECTION THICKNESS SHALL BE MATCHED. TYPICAL ROAD WIDENING SECTION SHALL BE:
   - HOT MIX ASPHALT (HMA) PER THE DESIGN STANDARDS TO 95% RELATIVE COMPACTION, OVER
   - CLASS II AGGREGATE BASE TO 95% RELATIVE COMPACTION, OVER
   - 12" MINIMUM SUBGRADE TO 95% RELATIVE COMPACTION
3. GRIND 1.5-INCHES (MINIMUM) FROM THE EXISTING ADJACENT HMA PAVEMENT SO THAT FINAL HMA SEAMS ARE LOCATED IN ACCORDANCE WITH TABLE 1 & DRAWING R-1, OR AS DIRECTED BY THE DEPARTMENT.
4. NEW PAVEMENT SHALL BE PLACED IN LIFTS NOT EXCEEDING 3-INCHES (COMPACTED), WITH A MINIMUM LIFT NOT LESS THAN 1.5-INCHES.
5. A TACK COAT SHALL BE APPLIED TO ALL HORIZONTAL AND VERTICAL CONFORM SURFACES PRIOR TO PAVING.
6. AFTER PAVING, APPLY SS1H OIL (OR APPROVED EQUAL) TO ALL HMA SURFACE SEAMS PER MANUFACTURER'S RECOMMENDATIONS.
7. CUT AND FILL SLOPES BEYOND ROADWAY HINGE POINTS SHALL NOT EXCEED 2 HORIZONTAL:1 VERTICAL (OR 3h:1v IN NATIVE SAND) WITHOUT PRIOR APPROVAL BY THE DEPARTMENT.
8. THE PROJECT ENGINEER SHALL ACCOMMODATE FOR ROADSIDE DRAINAGE SUCH THAT IT DOES NOT ERODE THE AGGREGATE SHOULDER. DESIGN AND CONSTRUCTION SHALL BE TO THE SATISFACTION OF THE DEPARTMENT.
9. ROAD SECTIONS WITH HMA DIKE (REFER TO DRAWING No C-3) SHALL BE REQUIRED BY THE DEPARTMENT WHERE NEEDED TO CONTROL DRAINAGE OR EROSION AND ON LONGITUDINAL GRADES OF 3-PERCENT OR GREATER.

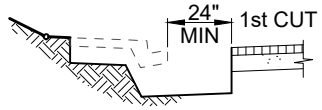

STEP 1: SAWCUT PER NOTE 1 AND REMOVE MATERIAL TO REQUIRED DEPTH.

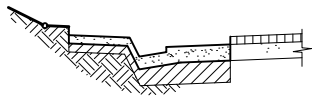

STEP 2: CONSTRUCT NEW SUBGRADE & BASE PER DEPARTMENT APPROVED SECTION.

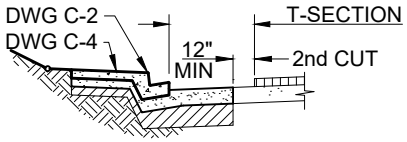

STEP 3: SAWCUT PER NOTE 1 TO REMOVE AN ADDITIONAL 12" MIN OF HMA SURFACE.

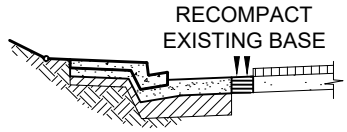

STEP 4: RECOMPACT EXISTING BASE SECTION TO 95% RELATIVE COMPACTION.

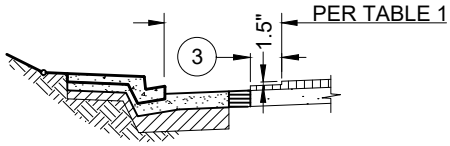

STEP 5: GRIND 1.5" (MIN) EXISTING ASPHALT SURFACE SO FINAL SEAMS ARE LOCATED PER TABLE 1.

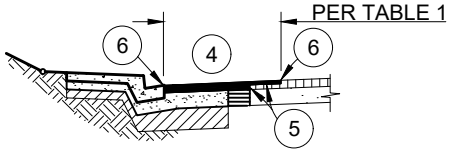

STEP 6: PAVE ROADWAY PER DEPARTMENT APPROVED SECTION.

WIDENING PROCEDURE

Table 1: Minimum Pavement Width Repair Limits (see R-1)

PCI	Roadways with 500 ADT or less and within the URL	All Other Roadways
85-100	Full Lane Width Overlay	Full Lane Width Overlay
65-84	12" min. T-Section	Half Lane Width Overlay
<65	12" min. T-Section	12" min. T-Section

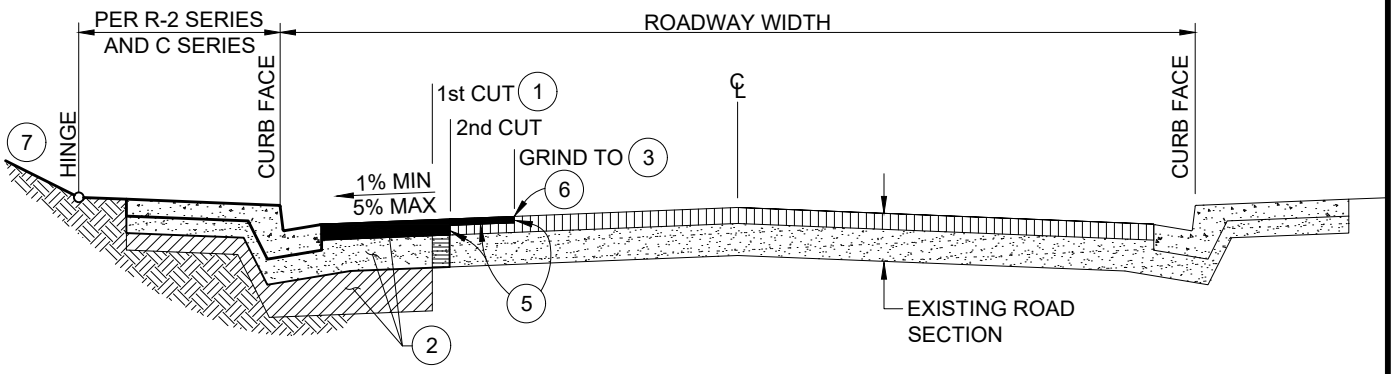

TYPICAL URBAN STREET WIDENING SECTION

NOTES:

1. SAWCUT TO REMOVE DAMAGED OR FAILED PAVEMENT SECTION ADJACENT TO THE EDGE OF PAVEMENT AS NECESSARY TO PROVIDE A CLEAN JOIN LINE. ALL SAWCUTS SHALL BE PERPENDICULAR OR TRANSVERSE TO THE TRAVEL LANE. CUT EDGES SHALL BE VERTICAL WITH SQUARE CORNERS AND SHALL BE STRAIGHT AND NEAT IN APPEARANCE.
2. THE STRUCTURAL ROAD WIDENING SECTION SHALL BE DETERMINED AT THE TIME OF CONSTRUCTION BASED ON THE SUBGRADE R-VALUE AND THE TRAFFIC INDEX (TI) AS PROVIDED BY THE DEPARTMENT. IF THE EXISTING ROAD STRUCTURAL SECTION IS GREATER THAN THE DETERMINED ROAD STRUCTURAL SECTION, THEN THE EXISTING STRUCTURAL SECTION THICKNESS SHALL BE MATCHED. TYPICAL ROAD WIDENING SECTION SHALL BE:
   - HOT MIX ASPHALT (HMA) PER THE DESIGN STANDARDS TO 95% RELATIVE COMPACTION, OVER
   - CLASS II AGGREGATE BASE TO 95% RELATIVE COMPACTION, OVER
   - 12" MINIMUM SUBGRADE TO 95% RELATIVE COMPACTION
3. GRIND 1.5-INCHES (MINIMUM) FROM THE EXISTING ADJACENT HMA PAVEMENT SO THAT FINAL HMA SEAMS ARE LOCATED IN ACCORDANCE WITH TABLE 1 & DRAWING R-1, OR AS DIRECTED BY THE DEPARTMENT.
4. NEW PAVEMENT SHALL BE PLACED IN LIFTS NOT EXCEEDING 3-INCHES (COMPACTED), WITH A MINIMUM LIFT NOT LESS THAN 1.5-INCHES.
5. A TACK COAT SHALL BE APPLIED TO ALL HORIZONTAL AND VERTICAL CONFORM SURFACES PRIOR TO PAVING.
6. AFTER PAVING, APPLY SS1H OIL (OR APPROVED EQUAL) TO ALL HMA SURFACE SEAMS PER MANUFACTURER'S RECOMMENDATIONS.
7. CUT AND FILL SLOPES BEYOND ROADWAY HINGE POINTS SHALL NOT EXCEED 2 HORIZONTAL:1 VERTICAL (OR 3h:1v IN NATIVE SAND) WITHOUT PRIOR APPROVAL BY THE DEPARTMENT.
8. CURB, GUTTER, AND SIDEWALK SHALL BE PER APPLICABLE C SERIES STANDARD DRAWING.

DEPARTMENT OF PUBLIC WORKS - STANDARD DRAWINGS

PAVEMENT RESTORATION

URBAN STREET WIDENING

Issued: August 2022	Scale: NTS
Revised:	Revision No:
Drawing No: R-2a	

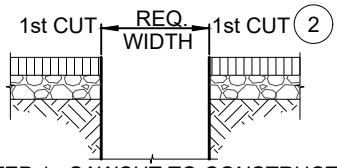

STEP 1: SAWCUT TO CONSTRUCT TRENCH PER U-4.

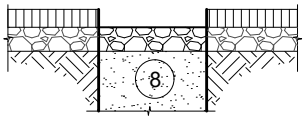

STEP 2: BACKFILL & COMPACT NEW TRENCH SECTION PER U-4.

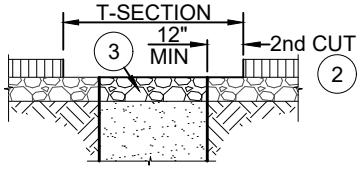

STEP 3: SAWCUT PER NOTE 2 TO REMOVE AN ADDITIONAL 12" MIN OF HMA SURFACE.

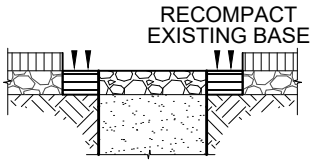

STEP 4: RECOMPACT EXISTING BASE SECTION TO 95% RELATIVE COMPACTION.

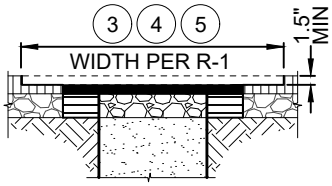

STEP 5: PAVE T-SECTION THEN GRIND 1.5" EXISTING SURFACE PER TABLE 1.

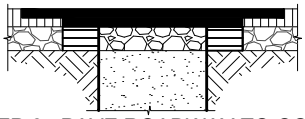

STEP 6: PAVE ROADWAY TO CONFORM TO FINAL GRADE.

PAVEMENT REPAIR PROCEDURE

Table 1: Minimum Lane Width Repair Limits (see R-1)

PCI	Roadways with 500 ADT or less and within the URL	All Other Roadways
85-100	Full Lane Width Overlay	Full Lane Width Overlay
65-84	12" min. T-Section	Half Lane Width Overlay
<65	12" min. T-Section	12" min. T-Section

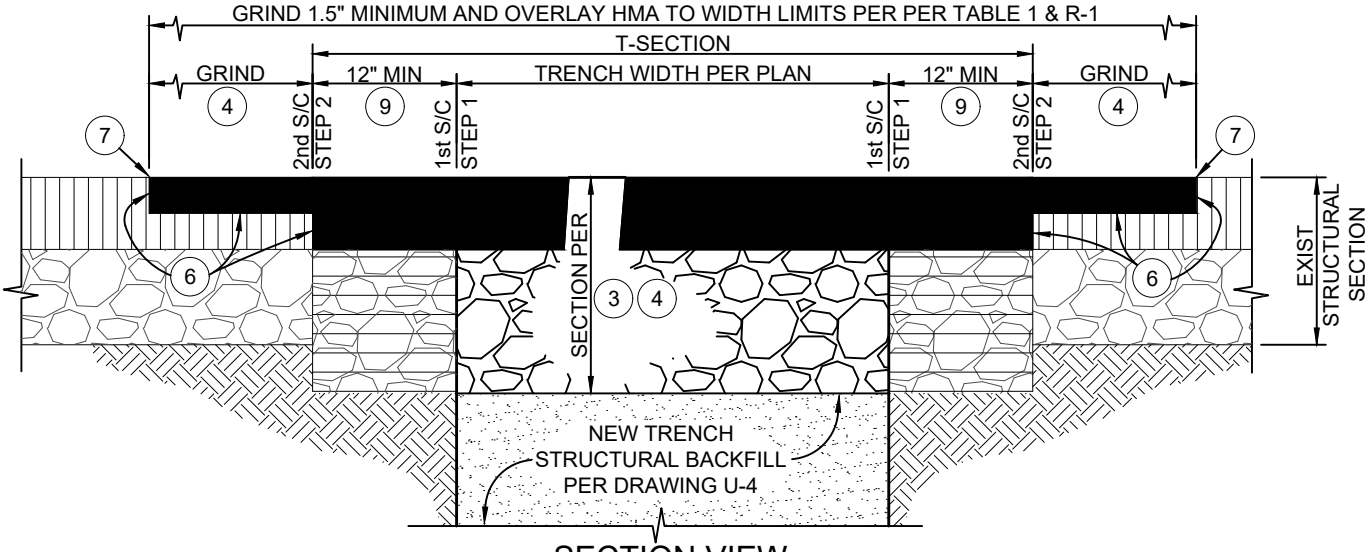

SECTION VIEW

NOTES:

1. TRENCHING IN A ROADWAY IS ONLY ALLOWED WHEN BORING IS SHOWN TO THE DEPARTMENT AS BEING INFEASIBLE.
2. SAWCUT TO REMOVE DAMAGED OR FAILED PAVEMENT SECTION ADJACENT TO THE EDGE OF TRENCH AS NECESSARY TO PROVIDE A CLEAN JOIN LINE. ALL SAWCUTS SHALL BE PERPENDICULAR OR TRANSVERSE TO THE TRAVEL LANE. CUT EDGES SHALL BE VERTICAL WITH SQUARE CORNERS AND SHALL BE STRAIGHT AND NEAT IN APPEARANCE. ALL SAWCUTS SHALL BE TO MINIMUM SHOWN OR TO COMPETENT PAVEMENT SECTION.
3. THE STRUCTURAL ROAD REPAIR SECTION SHALL MATCH THE EXISTING STRUCTURAL SECTION THICKNESS OR AS REQUIRED BY THE DEPARTMENT. THE MINIMUM STRUCTURAL SECTION SHALL BE:
   - 2-INCH MINIMUM HOT MIX ASPHALT (HMA) PER THE DESIGN STANDARDS TO 95% RELATIVE COMPACTION, OVER
   - 6-INCH MINIMUM CLASS II AGGREGATE BASE TO 95% RELATIVE COMPACTION, OVER
   - TRENCH SECTION PER DRAWING U-4 (STRUCTURAL BACKFILL TO 95% MIN RELATIVE COMPACTION)
4. LONGITUDINAL: GRIND 1.5-INCHES (MINIMUM) FROM THE EXISTING ADJACENT HMA PAVEMENT SO THAT FINAL HMA SEAMS ARE LOCATED IN ACCORDANCE WITH TABLE 1 & DRAWING R-1, OR AS DIRECTED BY THE DEPARTMENT.
5. NEW HMA PAVEMENT SHALL BE PLACED IN LIFTS NOT EXCEEDING 3-INCHES (COMPACTED) AND SHALL BE ALLOWED TO COOL PER STATE SPECIFICATIONS PRIOR TO APPLICATION OF SUBSEQUENT LIFTS.
6. A TACK COAT SHALL BE APPLIED TO ALL HORIZONTAL AND VERTICAL CONFORM SURFACES PRIOR TO PAVING.
7. AFTER PAVING APPLY SS1H OIL (OR APPROVED EQUAL) TO ALL HMA SURFACE SEAMS PER MANUFACTURER'S RECOMMENDATIONS.
8. THE DEPARTMENT SHALL PROVIDE ADDITIONAL REQUIREMENTS WHEN TRENCHING IN EXISTING ROADS HAVING CONCRETE STRUCTURAL SECTIONS.
9. T-SECTION WIDTHS SHALL BE INCREASED AS DIRECTED BY THE DEPARTMENT FOR UTILITY PIPES EXCEEDING 36" IN DIAMETER.
10. CONCRETE SLURRY TRENCH BACKFILL SHALL CONFORM TO STATE STANDARD SPECIFICATIONS, 188 LBS/CY CEMENTITIOUS MATERIAL [2 SACK], TO SURFACE OF BASE COURSE SECTION. DO NOT PLACE AGGREGATE BASE ABOVE SLURRY BACKFILL.

DEPARTMENT OF PUBLIC WORKS - STANDARD DRAWINGS

PAVEMENT RESTORATION

TRENCH REPAIR/BORE PITS IN HMA PAVEMENT

Issued: August 2022	Scale: NTS
Revised:	Revision No:
Drawing No:	R-3

NOTES:

1. WHEN REMOVING AND REPLACING EXISTING CURB, GUTTER, DRIVEWAY, CURB RAMP OR OTHER IMPROVEMENT ABUTTING THE ROADWAY THE PAVEMENT SHALL BE REMOVED AND REPLACED IN ACCORDANCE WITH R-1.
2. ALL SAWCUTTING SHALL BE DONE WITH AN ABRASIVE TYPE CUTTING WHEEL THAT PROVIDES A CLEAN JOINT EDGE. SAWCUTTING SHALL ALWAYS BE PERPENDICULAR OR TRANSVERSE TO THE EXISTING DIRECTION OF TRAVEL.
3. WHEN REPLACING EXISTING CURB, GUTTER AND/OR SIDEWALK, SAWCUTTING SHALL BE DONE AT THE NEAREST EXISTING EXPANSION JOINT OR WEAKENED PLANE JOINT FOR REMOVAL OF ENTIRE PANEL(S). NEW CURB, GUTTER AND SIDEWALK SHALL BE CONSTRUCTED TO THE RESPECTIVE COUNTY STANDARD.
4. WHEN REMOVING EXISTING CURB, GUTTER AND SIDEWALK TO INSTALL NEW DRIVEWAYS, CURB RAMP, OR OTHER IMPROVEMENTS THEN SAWCUTTING SHALL BE DONE AT THE NEAREST EXISTING EXPANSION JOINT OR WEAKENED PLANE JOINT FOR REMOVAL OF ENTIRE PANEL(S). NEW IMPROVEMENTS SHALL BE INSTALLED PER THEIR RESPECTIVE STANDARD DRAWING.
5. THE ROAD STRUCTURAL SECTION ADJACENT TO THE REPAIR OR REPLACEMENT SHALL BE CONSTRUCTED IN CONFORMANCE WITH STANDARD DRAWING R-2a.
6. IN ALL CASES, EXPANSION JOINTS SHALL BE REPLACED PER STANDARD DRAWING C-1, AND WEAKENED PLANE JOINTS SHALL BE REPLACED WITH CONSTRUCTION JOINTS.
7. REPAIR OF EXISTING IMPROVEMENTS SHALL BE REQUIRED BY THE DEPARTMENT WHEN THE VERTICAL (LIFT) AND HORIZONTAL (GAP) DIFFERENTIALS BETWEEN EXISTING CONCRETE SECTIONS MEET OR EXCEED THOSE REQUIREMENTS LISTED IN SECTION 4.
8. PROVIDE NEW CONTRACTION AND CONTROL JOINTS PER DRAWING C-1.

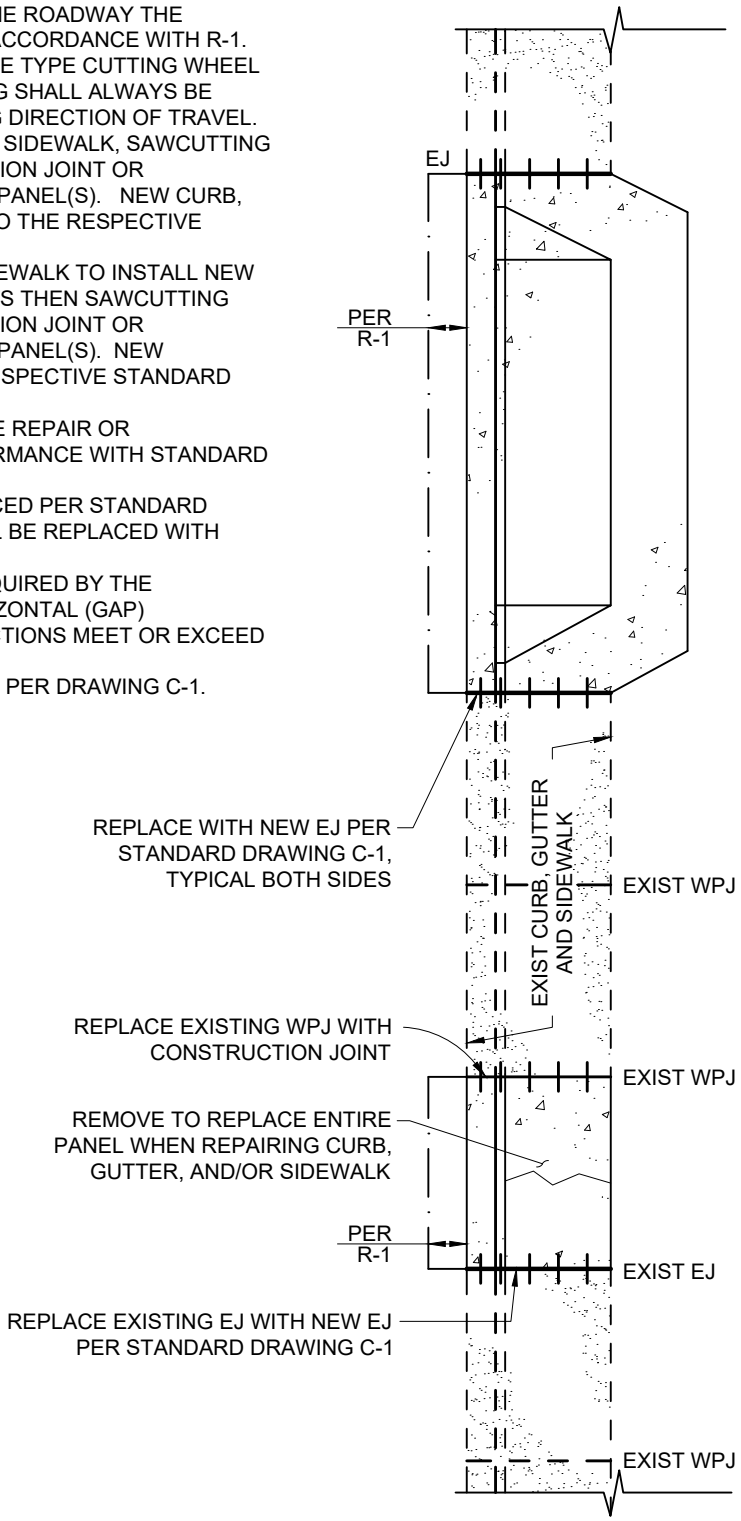

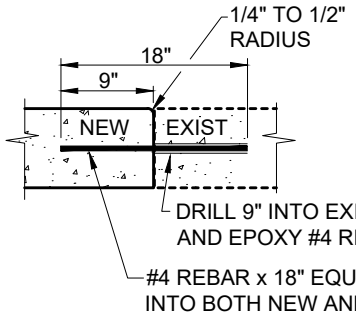

#4 REBAR, (1) EACH IN GUTTER, (1) EACH IN CURB FACE, AND (1) EVERY 18" ON-CENTER IN SIDEWALK AND OTHER FLATWORK

CONSTRUCTION (COLD) JOINT AT SAWCUT

DEPARTMENT OF PUBLIC WORKS - STANDARD DRAWINGS

PAVEMENT RESTORATION

CONCRETE FLATWORK REPAIR

Issued: August 2022	Scale: 1"=10'
Revised:	Revision No:
Drawing No: R-4	

NOTES:

1. REPAIR EXISTING ROADWAY IN ACCORDANCE WITH STANDARD DRAWINGS R-2 AND A-1 SERIES, OR AS DIRECTED BY THE DEPARTMENT.
2. PLACE EMBANKMENT MATERIAL IN CONFORMANCE WITH SECTION 19-2.03F OF THE STATE STANDARD SPECIFICATIONS HAVING A MINIMUM SAND EQUIVALENT OF 30.
3. PLACE GEOSYNTHETIC FIBER AT 3-FEET INTERVALS, OR AS DIRECTED BY THE DEPARTMENT.
4. PLACE FILTER FABRIC AT TOP AND ALL SIDES OF FINISHED GRADE (BELOW RSP) PER SECTION 96 OF THE STATE STANDARD SPECIFICATIONS.
5. CONSTRUCT 5-FEET BY 5-FEET KEYWAY OR AS DIRECTED BY THE DEPARTMENT.
6. PLACE 1-4 TON ROCK SLOPE PROTECTION (RSP), METHOD 'A' PLACEMENT PER SECTION 72-2 OF THE STATE STANDARD SPECIFICATIONS.
7. SMOOTH TOP OF SLOPE (HINGE POINT), PLACE BIODEGRADABLE, ROLLED EROSION CONTROL SLOPE PROTECTION ALONG ALL DISTURBED AREAS AND HYDROSEED PER COUNTY SEED MIX, OR AS DIRECTED BY THE DEPARTMENT.
8. WHEN ADJACENT TO A CREEK, STREAM OR OTHER DRAINAGE COURSE PLACE WILLOW CUTTINGS INTO RSP KEYWAY AND IN OTHER AREAS WHERE WATER CONDITIONS ARE FAVORABLE, AS DIRECTED BY THE DEPARTMENT.
9. WHEN ADJACENT TO CREEK, STREAM OR OTHER DRAINAGE COURSE OBTAIN ANY NECESSARY PERMITS PRIOR TO CONSTRUCTION.

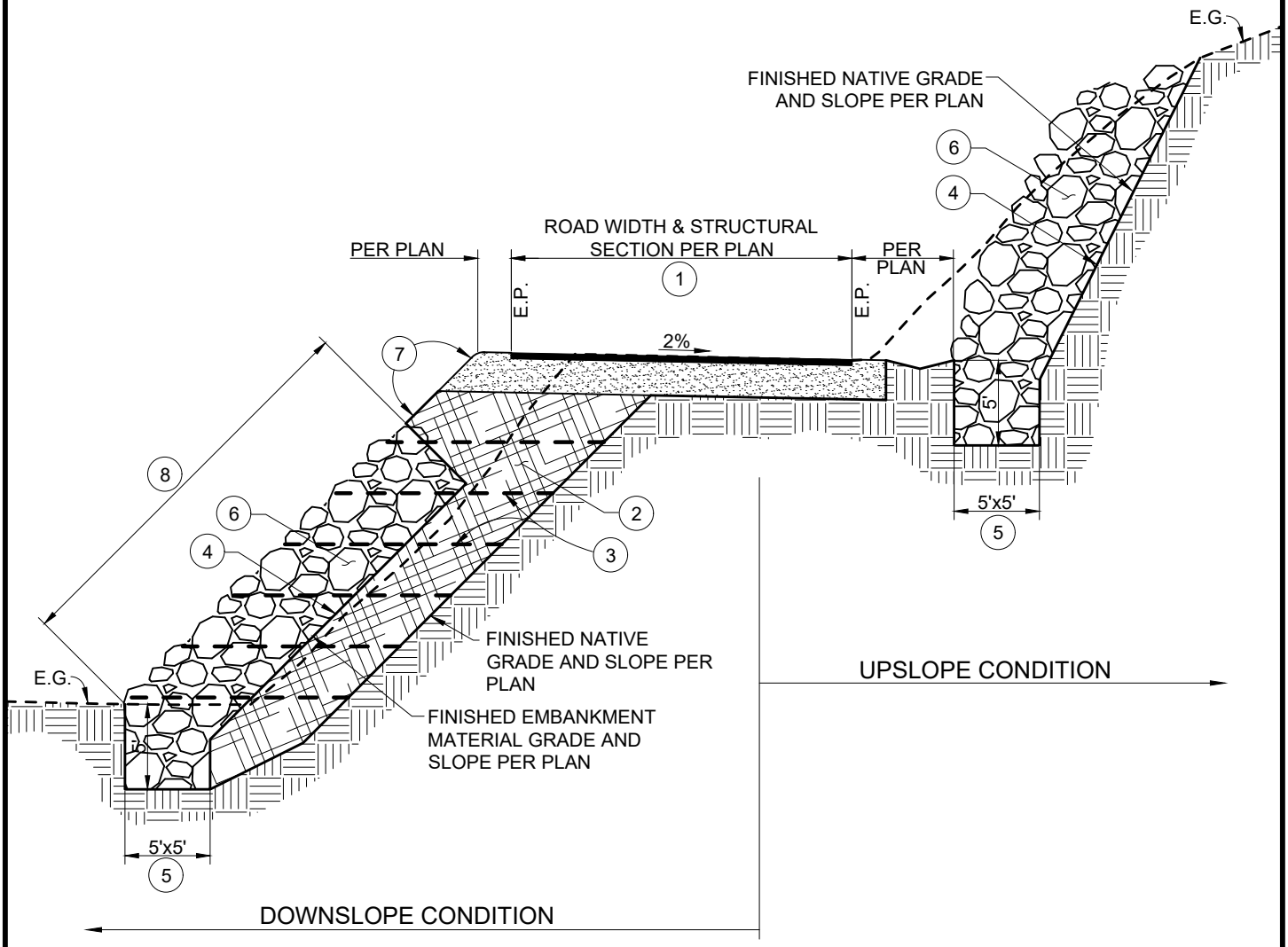

DEPARTMENT OF PUBLIC WORKS - STANDARD DRAWINGS

PAVEMENT RESTORATION

RURAL ROAD SLOPE REPAIR

Issued: August 2022	Scale: 1"=10'
Revised:	Revision No:
Drawing No: R-5	

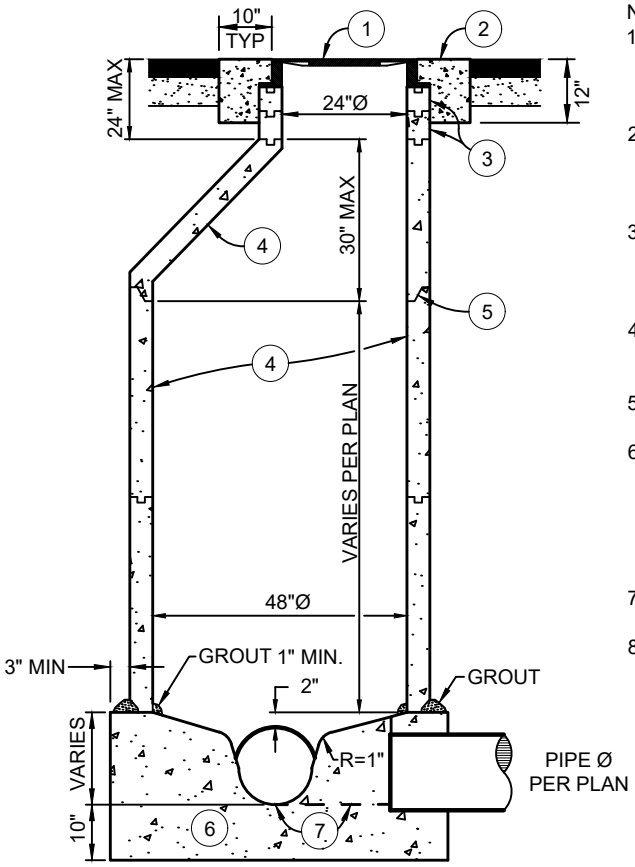

SECTION A-A

NOTES:

1. MANHOLE COVER AND FRAME SHALL HAVE A MINIMUM 24-INCHES DIAMETER OPENING AND CONFORM TO HS-20 TRAFFIC LOADING. LID SHALL HAVE A BLIND PICKHOLE, WATERTIGHT GASKET, AND BE LETTERED "SANITARY SEWER".
2. CONCRETE COLLAR SHALL CONFORM TO STATE STANDARD SPECIFICATIONS, 565 LBS/CY CEMENTITIOUS MATERIAL [6 SACK], TROWELLED TO STREET GRADE, AND ALLOWED TO CURE 48 HOURS PRIOR TO FULL TRAFFIC USE.
3. PROVIDE 3-INCHES OR 6-INCHES (9-INCHES MAX) ADJUSTING RINGS AS NEEDED, GROUTED ON THE INSIDE. PROVIDE HYDRAULIC CEMENT GROUT BETWEEN MANHOLE FRAME AND TOP RING SHALL BE PER APPENDIX C3.
4. PRECAST SHAFT(S) AND ECCENTRIC CONE SHALL MEET ASTM C-478 61T FOR CLASS 2 REINFORCED CONCRETE PIPE, OR AS APPROVED BY THE DEPARTMENT.
5. JOINTS SHALL BE WATERTIGHT, SET WITH BUTYL RUBBER SEALANT (RUB'R-NEK OR EQUAL).
6. CONCRETE MANHOLE BASE SHALL CONFORM TO STATE STANDARD SPECIFICATIONS, 565 LBS/CY CEMENTITIOUS MATERIAL [6 SACK], AND REST UPON UNDISTURBED MATERIAL. BOTTOM SHAFT SHALL BE WET-SET OR SET IN FORMED GROOVE. PRECAST BASES MAY BE USED WITH PRIOR APPROVAL OF THE DEPARTMENT AND SHALL MEET ASTM C-478 61T.
7. CONCRETE CHANNEL SHALL BE STEEL TROWEL FINISH AND SHELF AREAS SHALL BE MONOLITHICALLY PLACED.
8. UNDER NO CIRCUMSTANCES SHALL UTILITY LIDS AND CONCRETE COLLARS BE LOCATED WITHIN CURBS, GUTTERS, SIDEWALKS, DRIVEWAY APRONS, CURB RAMPS, OR CROSS GUTTERS.

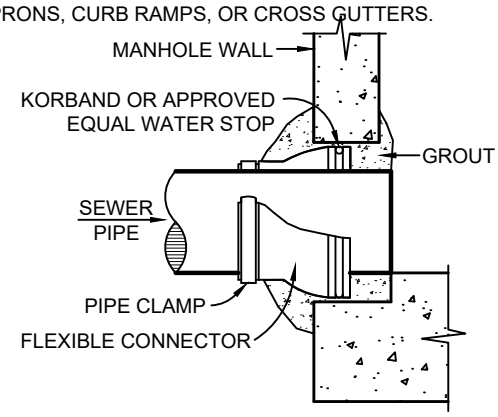

TYPICAL CONNECTION DETAIL

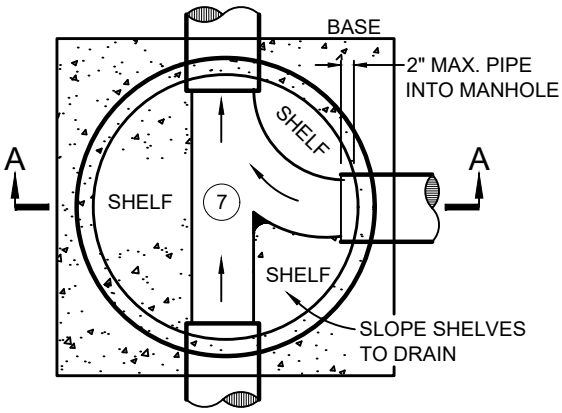

PLAN VIEW

PINKERTON A-640 WITH SKID RESISTANT SURFACE, BLIND PICKHOLE, WATER TIGHT GASKET, AND HS-20 TRAFFIC LOADING, OR APPROVED EQUAL, MARKED "SANITARY SEWER"

LID DETAIL

DEPARTMENT OF PUBLIC WORKS - STANDARD DRAWINGS

SANITARY SEWER MANHOLE

Issued: August 2022	Scale: NTS
Revised:	Revision No:
Drawing No: S-1	

NOTES:

1. MANHOLE COVER AND FRAME SHALL HAVE A MINIMUM 24-INCHES DIAMETER OPENING AND CONFORM TO HS-20 TRAFFIC LOADING. LID SHALL HAVE A BLIND PICKHOLE, WATERTIGHT GASKET, AND BE LETTERED "SANITARY SEWER".
2. CONCRETE COLLAR SHALL CONFORM TO STATE STANDARD SPECIFICATIONS, 565 LBS/CY CEMENTITIOUS MATERIAL [6 SACK], TROWELLED TO STREET GRADE, AND ALLOWED TO CURE 48 HOURS PRIOR TO FULL TRAFFIC USE.
3. PROVIDE 3-INCHES OR 6-INCHES (9-INCHES MAX) ADJUSTING RINGS AS NEEDED, GROUTED ON THE INSIDE. PROVIDE HYDRAULIC CEMENT GROUT BETWEEN MANHOLE FRAME AND TOP RING SHALL BE PER APPENDIX C3.
4. PRECAST SHAFT(S) AND ECCENTRIC CONE SHALL MEET ASTM C-478 61T FOR CLASS 2 REINFORCED CONCRETE PIPE, OR AS APPROVED BY THE DEPARTMENT.
5. JOINTS SHALL BE WATERTIGHT, SET WITH BUTYL RUBBER SEALANT (RUB'R-NEK OR EQUAL).
6. CONCRETE MANHOLE BASE SHALL CONFORM TO STATE STANDARD SPECIFICATIONS, 565 LBS/CY CEMENTITIOUS MATERIAL [6 SACK], AND REST UPON UNDISTURBED MATERIAL. BOTTOM SHAFT SHALL BE WET-SET OR SET IN FORMED GROOVE. PRECAST BASES MAY BE USED WITH PRIOR APPROVAL OF THE DEPARTMENT AND SHALL MEET ASTM C-478 61T.
7. CONCRETE CHANNEL SHALL BE STEEL TROWEL FINISH AND SHELF AREAS SHALL BE MONOLITHICALLY PLACED.
8. LATERAL CONNECTION OVER 5-FEET TO BE P.V.C. FOR DROP TEE, PIPE, AND 90-DEGREE BEND.
9. INSTALL REMOVABLE PLUG.
10. SEWER CLEANOUT BOX PER STANDARD DRAWING S-2.
11. UNDER NO CIRCUMSTANCES SHALL UTILITY LIDS AND CONCRETE COLLARS BE LOCATED WITHIN CURBS, GUTTERS, SIDEWALKS, DRIVEWAY APRONS, CURB RAMPS, OR CROSS GUTTERS.

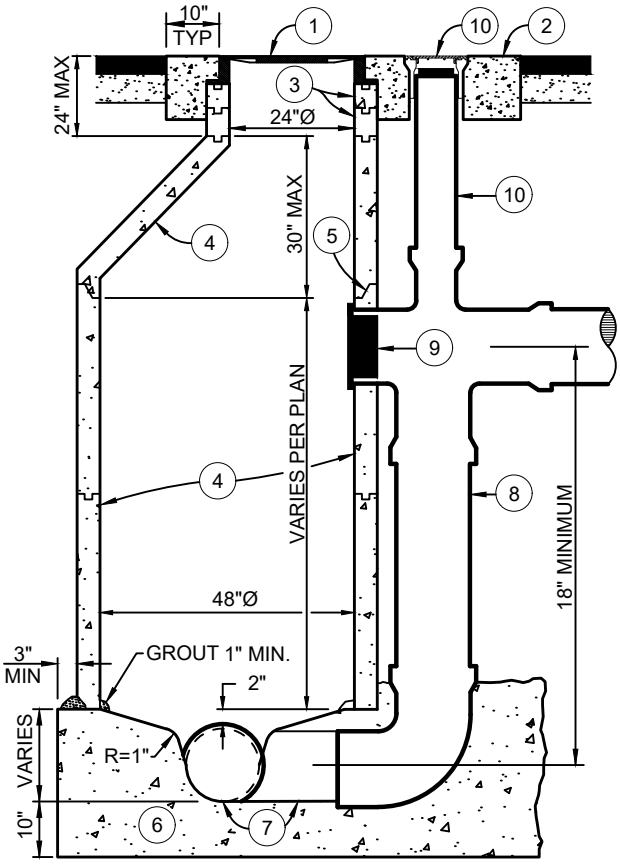

SECTION A-A

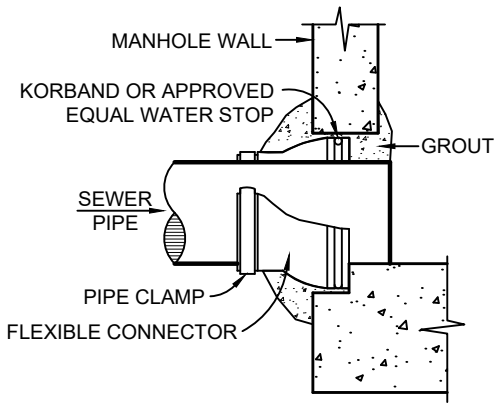

TYPICAL CONNECTION DETAIL

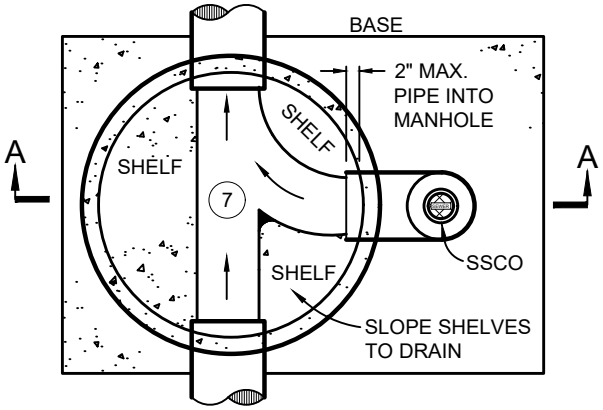

PLAN VIEW

PINKERTON A-640 WITH SKID RESISTANT SURFACE, BLIND PICKHOLE, WATER TIGHT GASKET, AND HS-20 TRAFFIC LOADING, OR APPROVED EQUAL, MARKED "SANITARY SEWER"

LID DETAIL

DEPARTMENT OF PUBLIC WORKS - STANDARD DRAWINGS

SANITARY SEWER
DROP MANHOLE

Issued: August 2022	Scale: NTS
Revised:	Revision No:
Drawing No: S-1a	

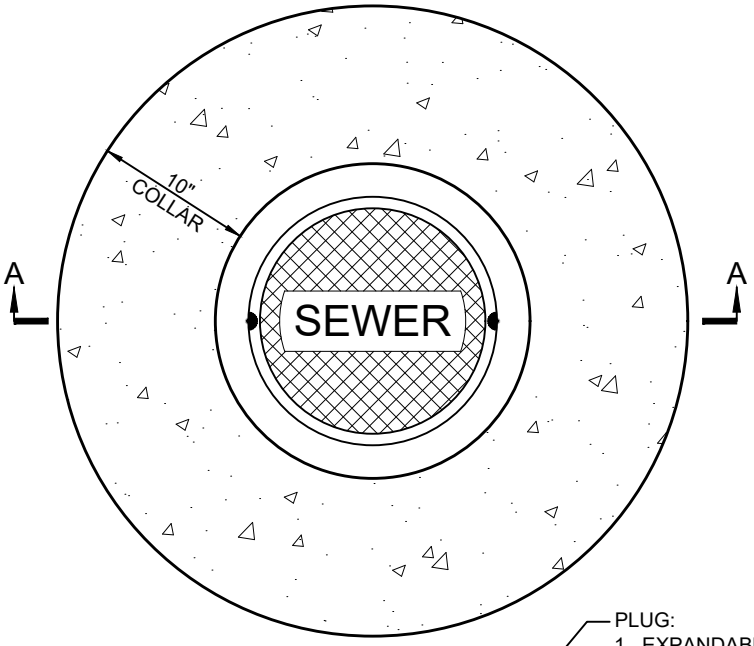

PLAN

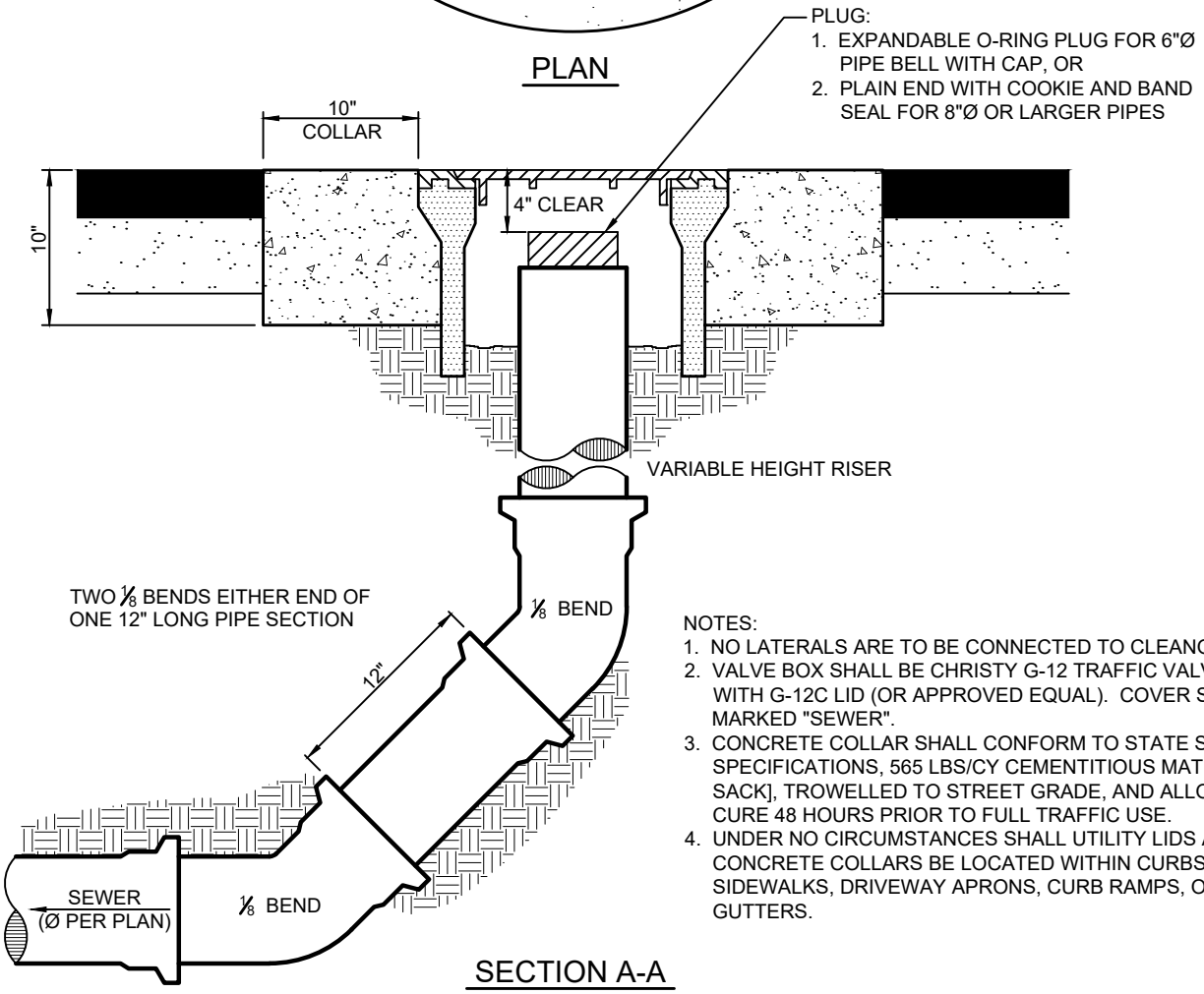

SECTION A-A

NOTES:
1. NO LATERALS ARE TO BE CONNECTED TO CLEANOUTS.
2. VALVE BOX SHALL BE CHRISTY G-12 TRAFFIC VALVE BOX WITH G-12C LID (OR APPROVED EQUAL). COVER SHALL BE MARKED "SEWER".
3. CONCRETE COLLAR SHALL CONFORM TO STATE STANDARD SPECIFICATIONS, 565 LBS/CY CEMENTITIOUS MATERIAL [6 SACK], TROWELLED TO STREET GRADE, AND ALLOWED TO CURE 48 HOURS PRIOR TO FULL TRAFFIC USE.
4. UNDER NO CIRCUMSTANCES SHALL UTILITY LIDS AND CONCRETE COLLARS BE LOCATED WITHIN CURBS, GUTTERS, SIDEWALKS, DRIVEWAY APRONS, CURB RAMPS, OR CROSS GUTTERS.

DEPARTMENT OF PUBLIC WORKS - STANDARD DRAWINGS

SANITARY SEWER
MAIN CLEANOUT

Issued:	Scale:
August 2022	NTS
Revised:	Revision No:
Drawing No:	S-2

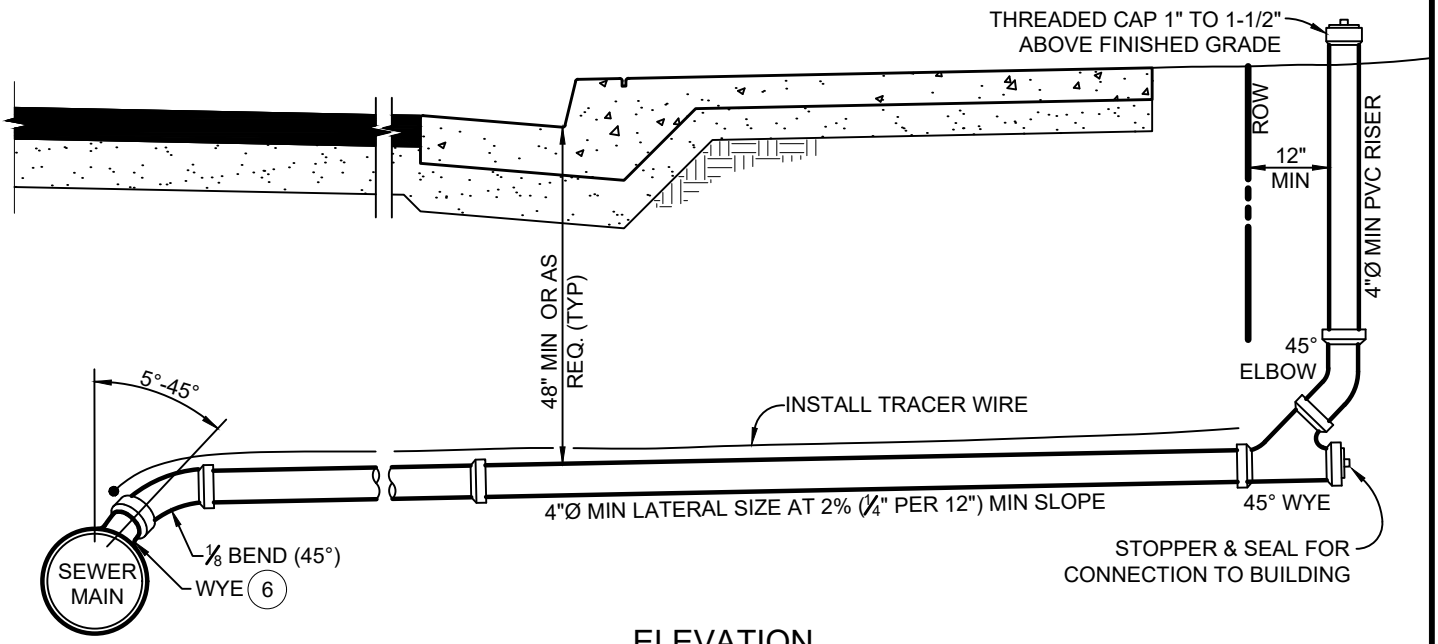

ELEVATION

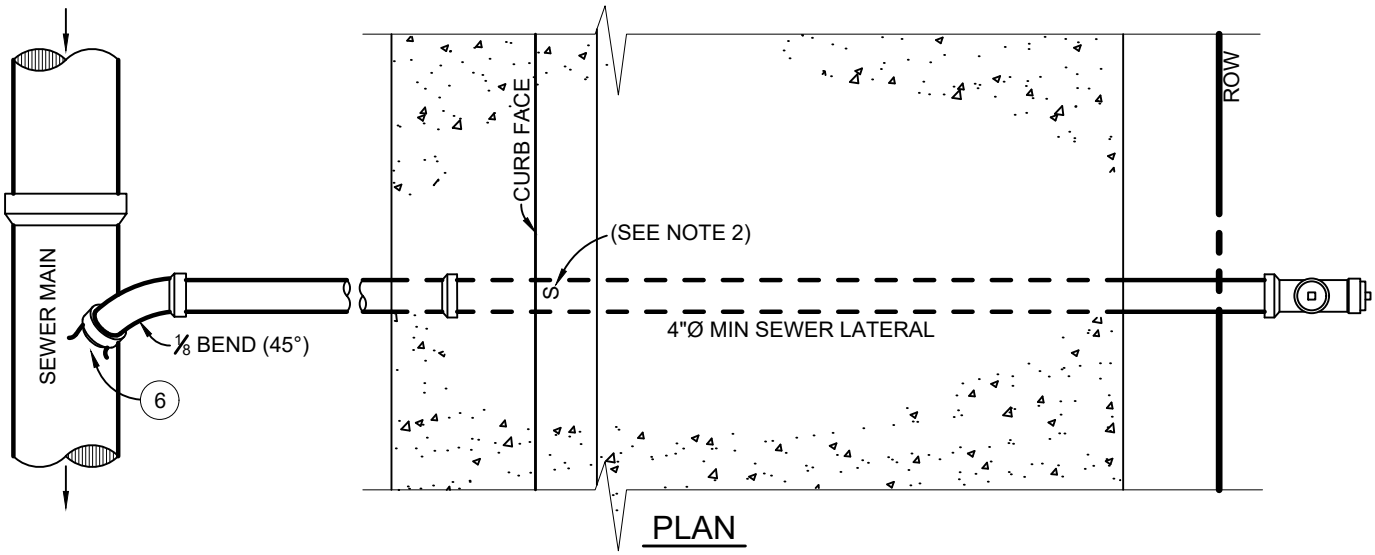

PLAN

NOTES:

1. SEWER LATERAL SHALL BE 4-INCH DIAMETER PVC PIPE AND SHALL MEET ASTM STANDARD D 3034, SDR 35.
2. AN "S" SHALL BE STAMPED OR CHISELED ON THE CURB OVER THE SEWER LATERAL WHEN CURB AND GUTTER IS EITHER CONSTRUCTED OR EXISTING. THE "S" SHALL BE A MINIMUM OF 3" HIGH x 2" WIDE x 3/16" DEEP.
3. MAINTAIN A 5-FEET MINIMUM SEPARATION BETWEEN WATER AND SEWER SERVICE LATERALS.
4. SEWER LATERALS SHALL NOT BE LOCATED UNDER DRIVEWAYS.
5. SADDLE CONNECTIONS ARE NOT PERMITTED ON NEW SEWER MAINS.
6. FACTORY-FABRICATED WYE IN SEWER MAIN WITH 1/8 (45-DEGREE) BEND. BEND SHALL POINT DOWNSTREAM AND ENTER MAIN AT A VERTICAL ANGLE OF NOT LESS THAN 5-DEGREES OR MORE THAN 45-DEGREES. FOR SEWER LATERALS CONNECTING ONTO EXISTING SEWER MAIN A SADDLE TEE-BRANCH MAYBE USED IF APPROVED BY THE DEPARTMENT.
7. UNDER NO CIRCUMSTANCES SHALL UTILITY LIDS AND CONCRETE COLLARS BE LOCATED WITHIN CURBS, GUTTERS, SIDEWALKS, DRIVEWAY APRONS, CURB RAMPS, OR CROSS GUTTERS.

DEPARTMENT OF PUBLIC WORKS - STANDARD DRAWINGS

SANITARY SEWER
SERVICE LATERAL

Issued:	Scale:
August 2022	NTS
Revised:	Revision No:
Drawing No:	S-3

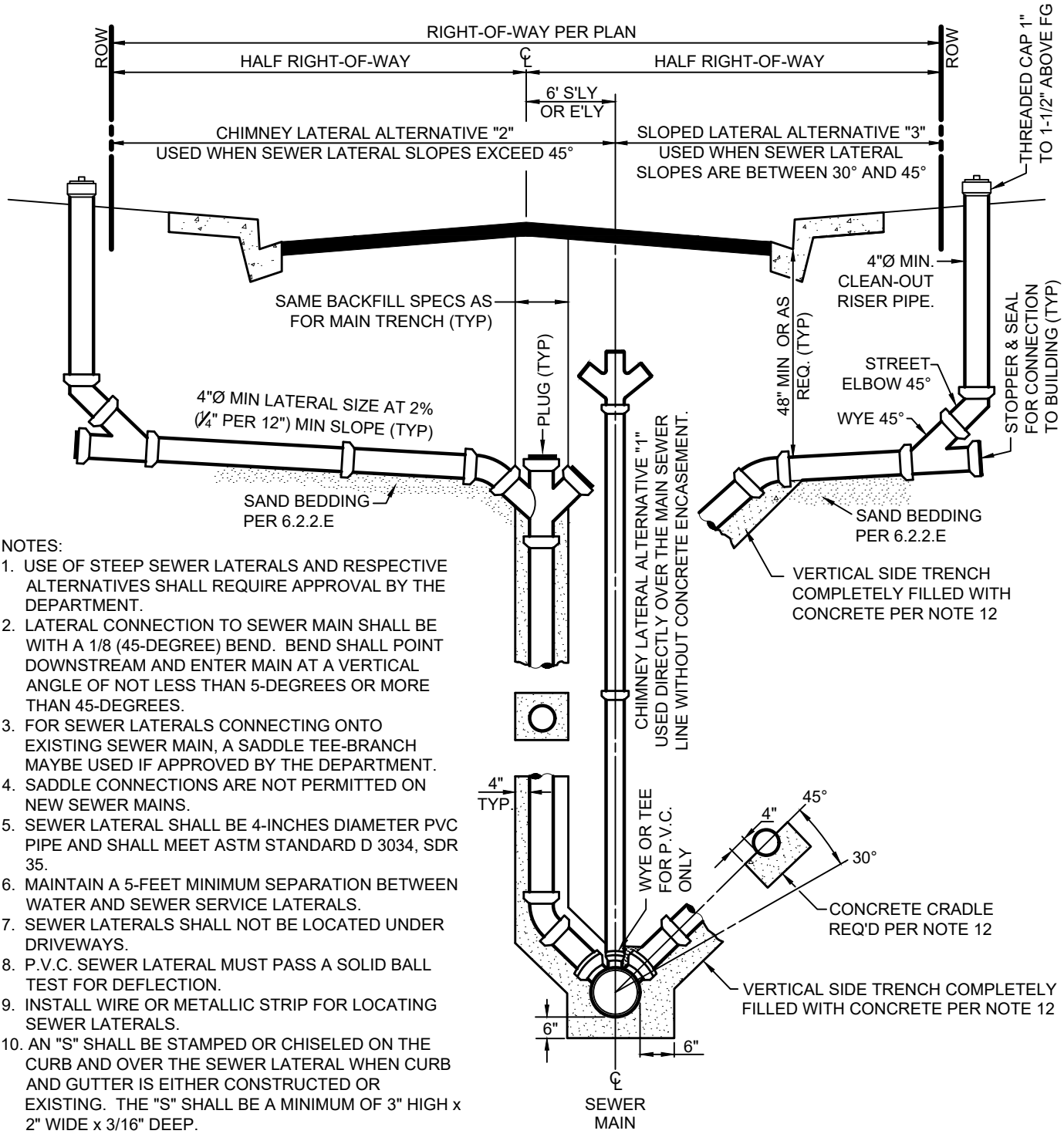

NOTES:

1. USE OF STEEP SEWER LATERALS AND RESPECTIVE ALTERNATIVES SHALL REQUIRE APPROVAL BY THE DEPARTMENT.
2. LATERAL CONNECTION TO SEWER MAIN SHALL BE WITH A 1/8 (45-DEGREE) BEND. BEND SHALL POINT DOWNSTREAM AND ENTER MAIN AT A VERTICAL ANGLE OF NOT LESS THAN 5-DEGREES OR MORE THAN 45-DEGREES.
3. FOR SEWER LATERALS CONNECTING ONTO EXISTING SEWER MAIN, A SADDLE TEE-BRANCH MAYBE USED IF APPROVED BY THE DEPARTMENT.
4. SADDLE CONNECTIONS ARE NOT PERMITTED ON NEW SEWER MAINS.
5. SEWER LATERAL SHALL BE 4-INCHES DIAMETER PVC PIPE AND SHALL MEET ASTM STANDARD D 3034, SDR 35.
6. MAINTAIN A 5-FEET MINIMUM SEPARATION BETWEEN WATER AND SEWER SERVICE LATERALS.
7. SEWER LATERALS SHALL NOT BE LOCATED UNDER DRIVEWAYS.
8. P.V.C. SEWER LATERAL MUST PASS A SOLID BALL TEST FOR DEFLECTION.
9. INSTALL WIRE OR METALLIC STRIP FOR LOCATING SEWER LATERALS.
10. AN "S" SHALL BE STAMPED OR CHISELED ON THE CURB AND OVER THE SEWER LATERAL WHEN CURB AND GUTTER IS EITHER CONSTRUCTED OR EXISTING. THE "S" SHALL BE A MINIMUM OF 3" HIGH x 2" WIDE x 3/16" DEEP.
11. UNDER NO CIRCUMSTANCES SHALL UTILITY LIDS AND CONCRETE COLLARS BE LOCATED WITHIN CURBS, GUTTERS, SIDEWALKS, DRIVEWAY APRONS, CURB RAMPS, OR CROSS GUTTERS.
12. CONCRETE THRUST BLOCKS SHALL CONFORM TO STATE STANDARD 90-1.01, 470 LBS/CY CEMENTITIOUS MATERIAL [5 SACK].

DEPARTMENT OF PUBLIC WORKS - STANDARD DRAWINGS

SANITARY SEWER
SERVICE LATERAL FOR DEEP MAINS

Issued: August 2022	Scale: NTS
Revised:	Revision No:
Drawing No: S-3a	

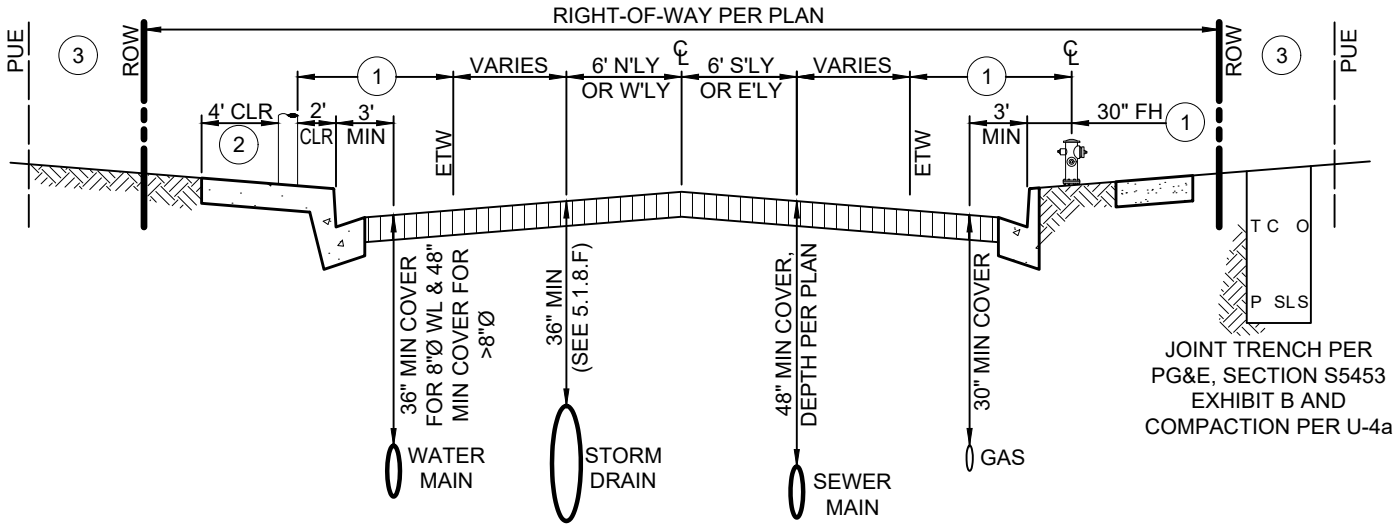

URBAN STREET UTILITY LOCATIONS

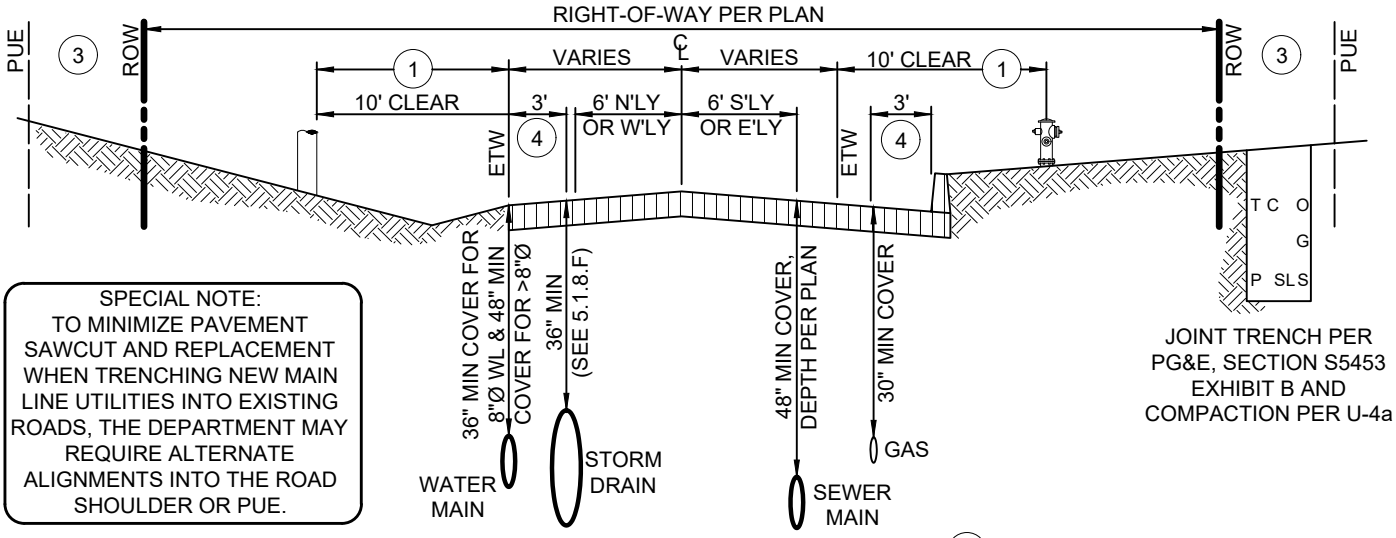

SPECIAL NOTE:
TO MINIMIZE PAVEMENT SAWCUT AND REPLACEMENT WHEN TRENCHING NEW MAIN LINE UTILITIES INTO EXISTING ROADS, THE DEPARTMENT MAY REQUIRE ALTERNATE ALIGNMENTS INTO THE ROAD SHOULDER OR PUE.

RURAL ROAD UTILITY LOCATIONS 5

NOTES:

1. ON RURAL ROADS ALL ABOVE GRADE FIXED OBJECTS (UTILITY POLES, LIGHT STANDARDS, ETC.) SHALL BE LOCATED AT LEAST 10-FEET CLEAR FROM THE EDGE OF TRAVELED WAY. ON URBAN STREETS THE FIXED OBJECTS MAY BE LOCATED 24-INCHES CLEAR FROM FACE OF CURB OR HMA DIKE ON LOW SPEED ROADS WITH DESIGN SPEEDS <40 mph.
2. PROVIDE 4-FEET UNOBSTRUCTED CLEARANCE BETWEEN ALL ABOVE GRADE OBSTACLES AND THE BACK OF SIDEWALK (MAY REQUIRE ADDITIONAL SIDEWALK WIDENING).
3. LOCATE UTILITY VAULTS, METER BOXES, PEDESTALS, TRANSFORMERS, ETC. WITHIN PUE AND NOT WITHIN THE SIDEWALK.
4. FOR RURAL ROAD CONDITIONS, GAS AND WATER LINES SHALL BE LOCATED AT 3-FEET OFF FACE OF DIKE OR AT EDGE OF PAVEMENT.
5. THE DEPARTMENT MAY REQUIRE URBAN ROAD UTILITY STANDARD LOCATIONS FOR RURAL ROADS.
6. STREET CROSSINGS OF WIRE AND GAS UTILITIES SHALL REQUIRE A MINIMUM 30-INCHES OF COVER AND SHALL BE AT RIGHT ANGLES TO THE ROADWAY CENTERLINE.
7. ABOVE GRADE UTILITY APPURTENANCES SHALL BE LOCATED AS TO MEET DEPARTMENT SIGHT DISTANCE REQUIREMENTS (REFER TO A-5 SERIES DRAWINGS).
8. REFER TO STANDARD DRAWING U-2 FOR LOCATION OF SERVICE LATERALS AND WATER METER BOXES.
9. UNDER NO CIRCUMSTANCES SHALL UTILITY LIDS AND CONCRETE COLLARS BE LOCATED WITHIN CURBS, GUTTERS, SIDEWALKS, DRIVEWAY APRONS, CURB RAMPS, OR CROSS GUTTERS.
10. PROVIDE 12-INCH MINIMUM CLEARANCE BETWEEN STORM DRAIN CROSSINGS WITH WATER AND SEWER LINES.

DEPARTMENT OF PUBLIC WORKS - STANDARD DRAWINGS

UTILITY LOCATION
MAIN LINES

Issued:	Scale:
August 2022	NTS
Revised:	Revision No:
Drawing No:	U-1

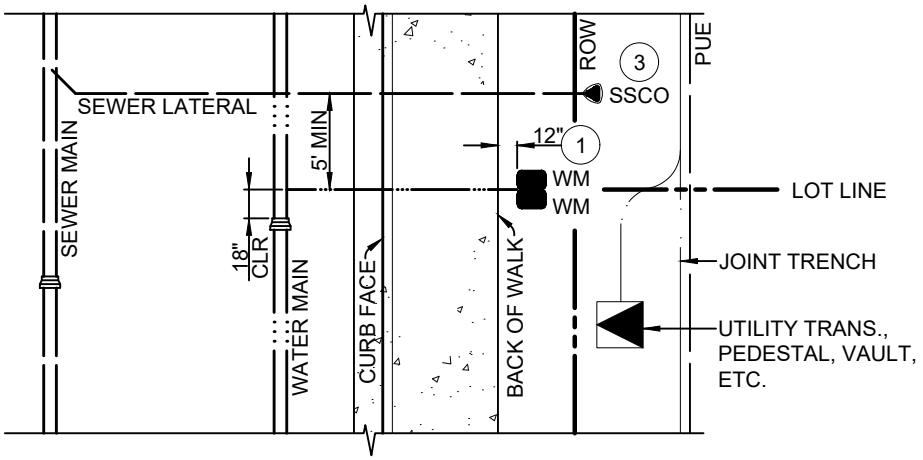

URBAN CURB, GUTTER & SIDEWALK

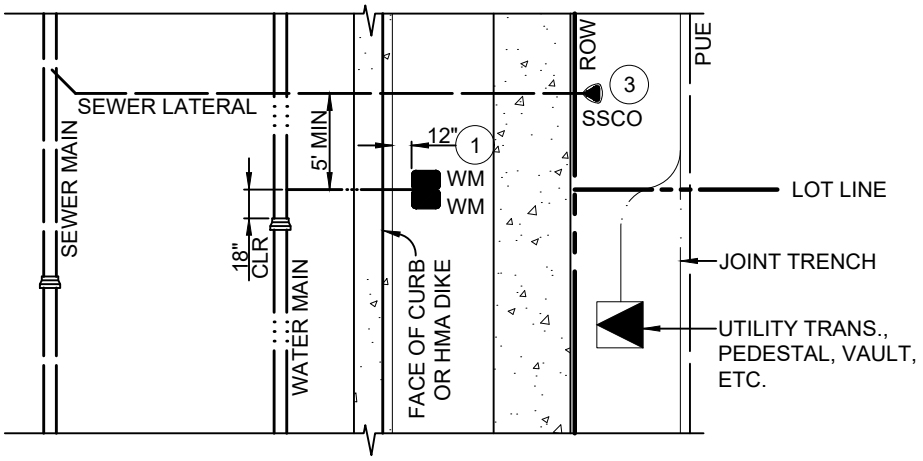

RURAL HMA DIKE OR
URBAN CURB WITH DETACHED SIDEWALK

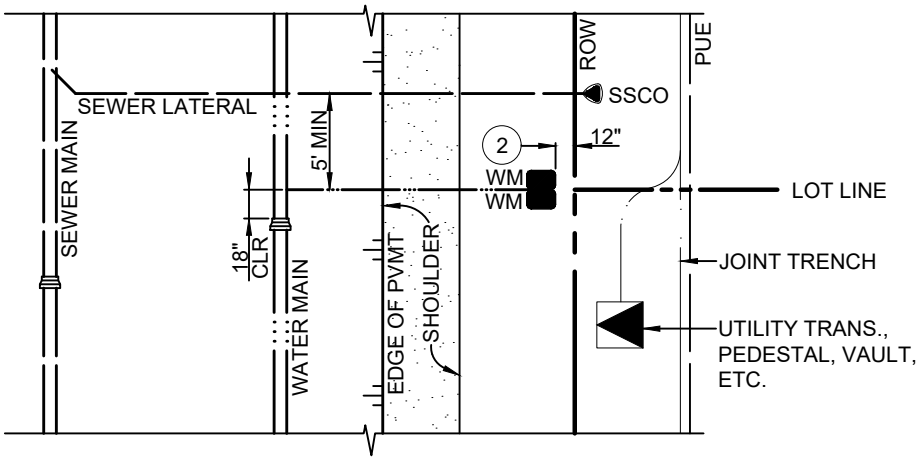

RURAL EDGE OF PAVEMENT

NOTES:

1. LOCATE WATER METER VAULT 12-INCHES BEHIND BACK OF CURB OR BACK OF AC DIKE.
2. LOCATE WATER METER VAULT 12-INCHES INSIDE RIGHT-OF-WAY.
3. SEWER CLEAN-OUTS SHALL BE LOCATED OUTSIDE OF SIDEWALK AND DRIVEWAY AREAS.
4. ALL WATER METER VAULTS (BOXES) SHALL BE PER STANDARD DRAWINGS.
5. WIRE UTILITY JOINT TRENCH AND APPURTENANCES ARE SHOWN FOR REFERENCE ONLY. REFER TO THE RESPECTIVE UTILITY COMPANY'S HANDOUT PACKAGE FOR ACTUAL ALIGNMENTS AND CONSTRUCTION REQUIREMENTS.
6. WATER AND SEWER SERVICE LATERALS SHALL BE PERPENDICULAR TO THEIR RESPECTIVE MAIN LINES FOR EASE OF LOCATION. ALL WATER LINE TRENCHES SHALL HAVE BOTH TRACE WIRE AND TAPE, REFER TO STANDARD TRENCH DRAWINGS.
7. FOR UNPAVED AREAS, THE WATER METER BOX SHALL BE SET 1-INCH TO 1.5-INCHES ABOVE FINISHED GRADE.

DEPARTMENT OF PUBLIC WORKS - STANDARD DRAWINGS

UTILITY LOCATION
SERVICE LATERALS

Issued: August 2022	Scale: NTS
Revised:	Revision No:
Drawing No: U-2	

NOTES:
THE "CALIFORNIA WATERWORKS STANDARDS" SETS FORTH THE MINIMUM SEPARATION REQUIREMENTS FOR WATER MAINS AND SEWER LINES AS CONTAINED IN SECTION 64630, TITLE 22, CALIFORNIA ADMINISTRATIVE CODE. THE FOLLOWING IS A SUMMARY OF THOSE REQUIREMENTS:

1. PARALLEL CONSTRUCTION: THE HORIZONTAL DISTANCE BETWEEN PRESSURE WATER MAINS AND SEWER LINES SHALL BE AT LEAST 10-FEET, MEASURED FROM THE NEAREST EDGES OF THE FACILITIES.

2. PERPENDICULAR CONSTRUCTION (CROSSING): PRESSURE WATER MAINS SHALL BE AT LEAST 12-INCHES ABOVE SANITARY SEWER LINES WHERE THESE LINES MUST CROSS MEASURED FROM THE NEAREST EDGES OF THE FACILITIES.

3. COMMON TRENCH: WATER MAINS AND SEWER LINES SHALL NOT BE INSTALLED IN THE SAME TRENCH.

4. WHEN ADEQUATE PHYSICAL SEPARATION CANNOT BE ATTAINED, AN INCREASE IN THE FACTOR OF SAFETY SHOULD BE PROVIDED BY INCREASING THE STRUCTURAL INTEGRITY OF BOTH THE PIPE MATERIALS AND JOINTS.

5. LOCAL CONDITIONS MAY CREATE A SITUATION WHERE THERE IS NO ALTERNATIVE BUT TO INSTALL WATER MAINS OR SEWER LINES AT A DISTANCE LESS THAN THAT REQUIRED BY THE BASIC SEPARATION STANDARDS. IN SUCH CASES, ALTERNATIVE CONSTRUCTION CRITERIA AS SPECIFIED IN THIS STANDARD SHALL BE FOLLOWED.

6. DUE TO SPECIAL HAZARDS, INSTALLATIONS OF WATER MAINS AND SEWER LINES 24-INCHES DIAMETER OR LARGER SHALL BE REVIEWED AND APPROVED BY THE HEALTH AGENCY PRIOR TO CONSTRUCTION.

7. THE CONSTRUCTION CRITERIA SHOULD APPLY TO THE HOUSE LATERALS THAT CROSS ABOVE A PRESSURE WATER MAIN BUT NOT TO THOSE HOUSE LATERALS THAT CROSS BELOW A PRESSURE WATER MAIN.

ALTERNATIVE CRITERIA FOR CONSTRUCTION THE CONSTRUCTION CRITERIA FOR SEWER LINES OR WATER MAINS WHERE THE BASIC SEPARATION STANDARDS CANNOT BE ATTAINED ARE SHOWN AS CASE 1 PER STANDARD DRAWING U-3a AND CASE 2 ON STANDARD DRAWING U-3b.

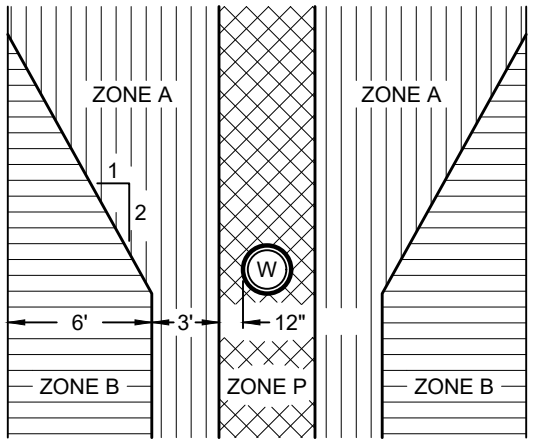

PARALLEL

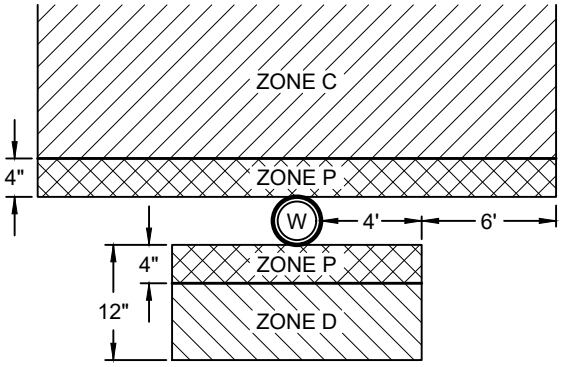

CROSSING

ZONE	SPECIAL CONSTRUCTION REQUIRED FOR SEWER:
A	SEWER LINES PARALLEL TO WATER MAINS SHALL NOT BE PERMITTED IN THIS ZONE WITHOUT APPROVAL FROM THE RESPONSIBLE HEALTH AGENCY AND WATER SUPPLIER.
B	A SEWER LINE PLACED PARALLEL TO A WATER LINE SHALL BE CONSTRUCTED OF: 1. CLASS 4000, TYPE II, ASBESTOS-CEMENT PIPE WITH RUBBER GASKET JOINTS. 2. PLASTIC SEWER PIPE WITH RUBBER RING JOINTS (PER ASTM D3034) OR EQUIVALENT. 3. CAST OR DUCTILE IRON PIPE WITH COMPRESSION JOINTS. 4. REINFORCED CONCRETE PRESSURE PIPE WITH COMPRESSION JOINTS (PER AWWA C302-74).
C	A SEWER LINE CROSSING A WATER MAIN SHALL BE CONSTRUCTED OF: 1. DUCTILE IRON PIPE WITH HOT DIP BITUMINOUS COATING AND MECHANICAL JOINTS. 2. A CONTINUOUS SECTION OF CLASS 200 (DR 14 PER AWWA C900) PLASTIC PIPE, OR EQUIVALENT, CENTERED OVER THE PIPE BEING CROSSED. 3. A CONTINUOUS SECTION OF REINFORCED CONCRETE PRESSURE PIPE (PER AWWA C302-74) CENTERED OVER THE PIPE BEING CROSSED. 4. ANY SEWER PIPE WITHIN A CONTINUOUS SLEEVE.
D	A SEWER LINE CROSSING A WATER MAIN SHALL BE CONSTRUCTED OF: 1. A CONTINUOUS SECTION OF DUCTILE IRON PIPE WITH HOT DIP BITUMINOUS COATING. 2. A CONTINUOUS SECTION OF CLASS 200 (DR 14 PER AWWA C900) PLASTIC PIPE OR EQUIVALENT, CENTERED OVER THE PIPE BEING CROSSED. 3. A CONTINUOUS SECTION OF REINFORCED CONCRETE PRESSURE PIPE (PER AWWA C302-74) CENTERED OVER THE PIPE BEING CROSSED. 4. ANY SEWER PIPE WITHIN A CONTINUOUS SLEEVE. 5. ANY SEWER PIPE SEPARATED BY A 10-FEET BY 10-FEET, 4-INCH THICK REINFORCED CONCRETE SLAB.
P	ZONE P IS A PROHIBITED ZONE, SECTION 64630(E)(2) CALIFORNIA ADMINISTRATIVE CODE, TITLE 22.

CASE 1: NEW SEWER MAIN

ALTERNATIVE CONSTRUCTION CRITERIA
APPLIES TO NEW SEWER MAINS & NEW OR EXISTING WATER MAINS

DEPARTMENT OF PUBLIC WORKS - STANDARD DRAWINGS

UTILITY SEPARATION CRITERIA

CASE 1: NEW SEWER MAINS

Issued: August 2022	Scale: NTS
Revised:	Revision No:
Drawing No: U-3a	

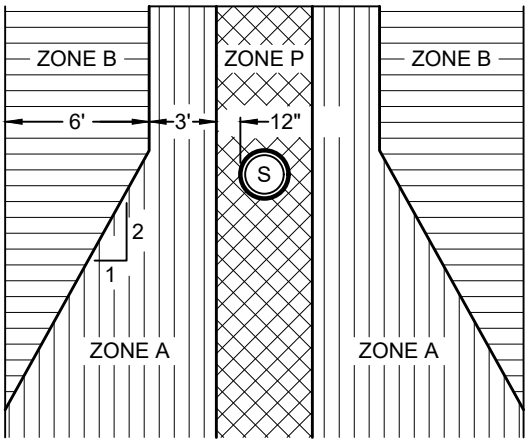

PARALLEL

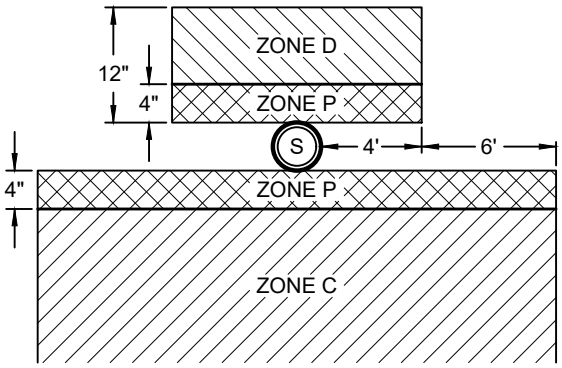

CROSSING

ZONE	SPECIAL CONSTRUCTION REQUIRED FOR WATER:
A	NO WATER MAINS PARALLEL TO SEWERS SHALL BE CONSTRUCTED WITHOUT APPROVAL FROM THE HEALTH AGENCY.
B	IF THE SEWER PARALLELING THE WATER MAIN DOES NOT MEET THE CASE 1, ZONE B REQUIREMENTS, THE WATER MAIN SHALL BE CONSTRUCTED OF: 1. DUCTILE IRON PIPE WITH HOT DIP BITUMINOUS COATING. 2. CLASS 200 PRESSURE RATED PLASTIC WATER PIPE (DR 14 PER AWWA C900) OR EQUIVALENT.
C	IF THE SEWER CROSSING THE WATER MAIN DOES NOT MEET THE CASE 1, ZONE C REQUIREMENTS, THE WATER MAIN SHALL HAVE NO JOINTS IN ZONE C AND BE CONSTRUCTED OF: 1. DUCTILE IRON PIPE WITH HOT DIP BITUMINOUS COATING. 2. CLASS 200 PRESSURE RATED PLASTIC WATER PIPE (DR 14 PER AWWA C900) OR EQUIVALENT.
D	IF THE SEWER CROSSING THE WATER MAIN DOES NOT MEET THE CASE 1, ZONE D REQUIREMENTS, THE WATER MAIN SHALL HAVE NO JOINTS WITHIN 4-FEET FROM EITHER SIDE OF THE SEWER AND SHALL BE CONSTRUCTED OF: 1. DUCTILE IRON PIPE WITH HOT DIP BITUMINOUS COATING. 2. CLASS 200 PRESSURE RATED PLASTIC WATER PIPE (DR 14 PER AWWA C900) OR EQUIVALENT.
P	ZONE P IS A PROHIBITED ZONE, SECTION 64630(E)(2) CALIFORNIA ADMINISTRATIVE CODE, TITLE 22.

CASE 2: NEW WATER MAIN

ALTERNATIVE CONSTRUCTION CRITERIA
APPLIES TO NEW WATER MAINS OR EXISTING SEWER MAINS

DEPARTMENT OF PUBLIC WORKS - STANDARD DRAWINGS

UTILITY SEPARATION CRITERIA

CASE 2: NEW WATER MAINS

Issued: August 2022	Scale: NTS
Revised:	Revision No:
Drawing No: U-3b	

WHEN TRENCHING INTO EXISTING ROADS ALL WORK SHALL BE DONE IN ACCORDANCE WITH STANDARD DRAWINGS R-1 AND R-4.

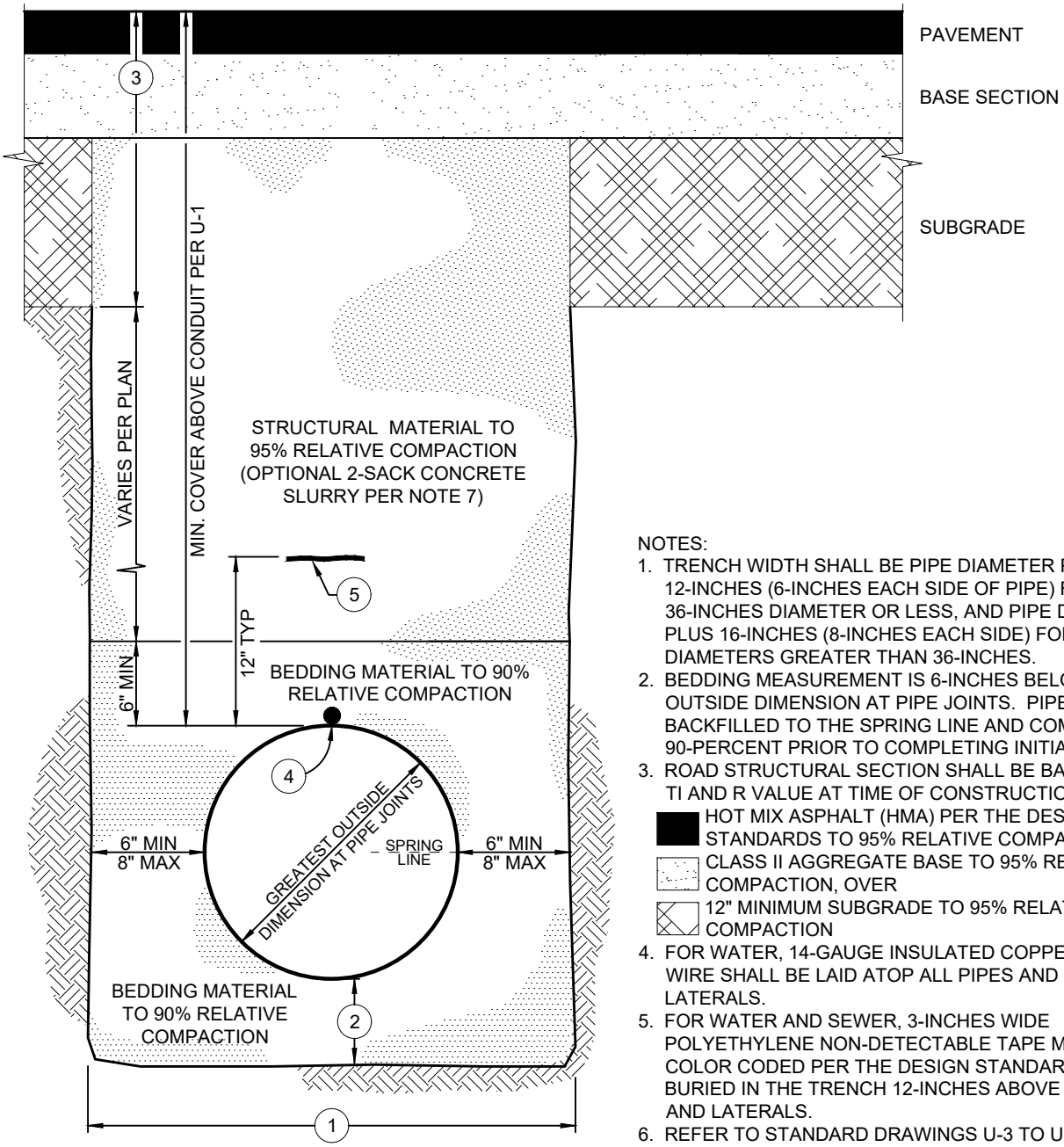

NOTES:

1. TRENCH WIDTH SHALL BE PIPE DIAMETER PLUS 12-INCHES (6-INCHES EACH SIDE OF PIPE) FOR PIPES 36-INCHES DIAMETER OR LESS, AND PIPE DIAMETER PLUS 16-INCHES (8-INCHES EACH SIDE) FOR PIPE DIAMETERS GREATER THAN 36-INCHES.
2. BEDDING MEASUREMENT IS 6-INCHES BELOW GREATEST OUTSIDE DIMENSION AT PIPE JOINTS. PIPE SHALL BE BACKFILLED TO THE SPRING LINE AND COMPACTED TO 90-PERCENT PRIOR TO COMPLETING INITIAL BACKFILL.
3. ROAD STRUCTURAL SECTION SHALL BE BASED ON THE TI AND R VALUE AT TIME OF CONSTRUCTION:
   - HOT MIX ASPHALT (HMA) PER THE DESIGN STANDARDS TO 95% RELATIVE COMPACTION, OVER
   - CLASS II AGGREGATE BASE TO 95% RELATIVE COMPACTION, OVER
   - 12" MINIMUM SUBGRADE TO 95% RELATIVE COMPACTION
4. FOR WATER, 14-GAUGE INSULATED COPPER TRACER WIRE SHALL BE LAID ATOP ALL PIPES AND SERVICE LATERALS.
5. FOR WATER AND SEWER, 3-INCHES WIDE POLYETHYLENE NON-DETECTABLE TAPE MARKED AND COLOR CODED PER THE DESIGN STANDARDS SHALL BE BURIED IN THE TRENCH 12-INCHES ABOVE ALL PIPES AND LATERALS.
6. REFER TO STANDARD DRAWINGS U-3 TO U-3b FOR ADDITIONAL REQUIREMENTS FOR WATER AND SEWER TRENCHES.
7. CONCRETE SLURRY TRENCH BACKFILL SHALL CONFORM TO STATE STANDARD 90-1.01, 188 LBS/CY CEMENTITIOUS MATERIAL [2 SACK], TO SURFACE OF BASE COURSE SECTION. DO NOT PLACE AGGREGATE BASE ABOVE SLURRY BACKFILL.

BEDDING MATERIAL

SIEVE SIZES	PERCENT PASSING
1"	100%
No. 4	80% - 100%
No. 200	0% - 15%

STRUCTURAL MATERIAL

SIEVE SIZES	PERCENT PASSING
3"	100%
No. 4	35% - 100%
No. 30	20% - 100%

DEPARTMENT OF PUBLIC WORKS - STANDARD DRAWINGS

TRENCH SECTION
HMA PAVED SURFACE

Issued: August 2022	Scale: NTS
Revised:	Revision No:
Drawing No: U-4	

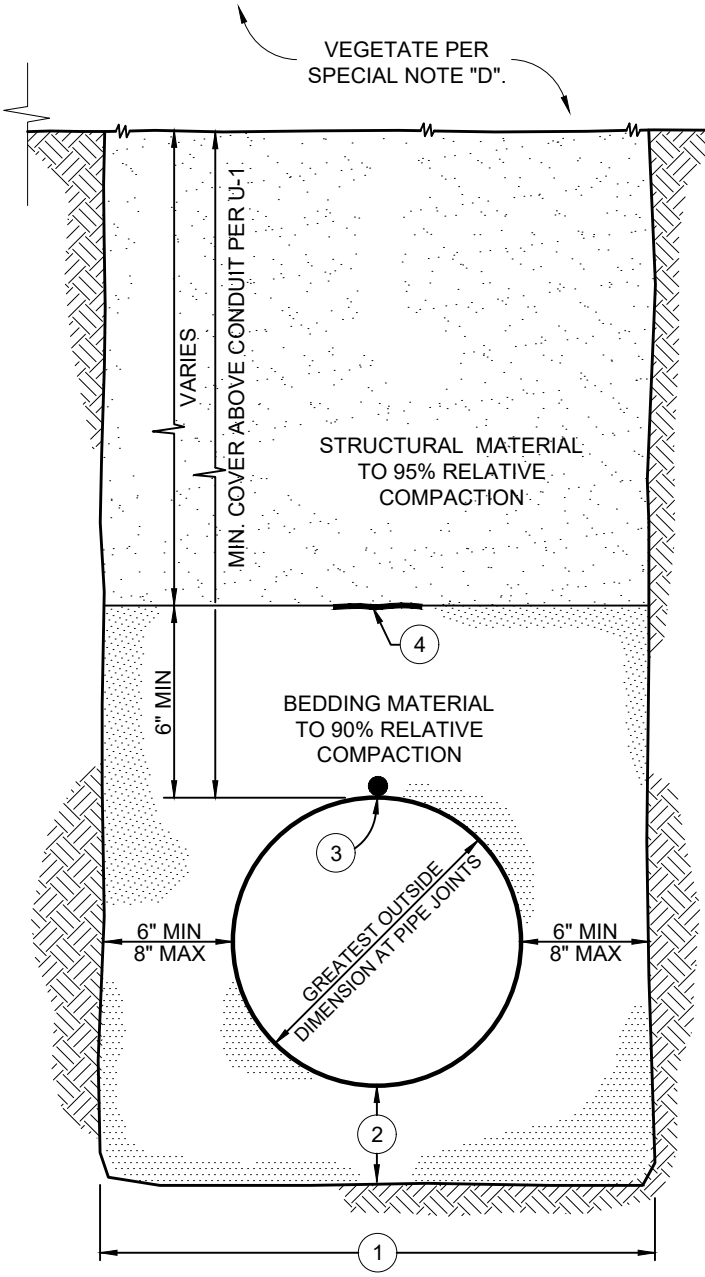

NOTES:

1. TRENCH WIDTH SHALL BE PIPE DIAMETER PLUS 12-INCHES (6-INCHES EACH SIDE OF PIPE) FOR PIPES 36-INCHES DIAMETER OR LESS, AND PIPE DIAMETER PLUS 16-INCHES (8-INCHES EACH SIDE) FOR PIPE DIAMETERS GREATER THAN 36-INCHES.
2. BEDDING MEASUREMENT IS 6-INCHES BELOW GREATEST OUTSIDE DIMENSION AT PIPE JOINTS. PIPE SHALL BE BACKFILLED TO THE SPRING LINE AND COMPACTED TO 90-PERCENT PRIOR TO COMPLETING INITIAL BACKFILL.
3. FOR WATER, 14-GAUGE INSULATED COPPER TRACER WIRE SHALL BE LAID ATOP ALL PIPES AND SERVICE LATERALS.
4. FOR WATER AND SEWER, 3-INCHES WIDE POLYETHYLENE NON-DETECTABLE TAPE MARKED AND COLOR CODED PER THE DESIGN STANDARDS SHALL BE BURIED IN THE TRENCH 12-INCHES ABOVE ALL PIPES AND LATERALS.
5. REFER TO STANDARD DRAWINGS U-3 TO U-3b FOR ADDITIONAL REQUIREMENTS FOR WATER AND SEWER TRENCHES.

SPECIAL NOTES:

A. SPECIAL CONSIDERATION SHALL BE TAKEN BY THE DESIGNER TO ENSURE SURFACE DRAINAGE WILL NOT ENTER THE TRENCH.
B. WHEN TRENCHING ON STEEP SLOPES, CUT-OFF WALLS AND/OR PIPE ANCHORS MAY BE REQUIRED BY THE DEPARTMENT AND SHALL BE DETAILED ON THE PLANS.
C. TRENCHING ALIGNMENT SHALL BE DESIGNED TO AVOID DAMAGE TO EXISTING TREES AND THEIR ROOT SYSTEMS. WHEN ADJACENT TO TREES THEN THE TRENCHING RECOMMENDATIONS OF THE PROJECT BOTANIST SHALL BE FOLLOWED.
D. THE UPPER SURFACE SHALL BE SCARIFIED AND REVEGETATED. VEGETATIVE COVER SHALL BE ESTABLISHED PRIOR TO ACCEPTANCE OF WORK.

BEDDING MATERIAL

SIEVE SIZES	PERCENT PASSING
1"	100%
No. 4	80% - 100%
No. 200	0% - 15%

STRUCTURAL MATERIAL

SIEVE SIZES	PERCENT PASSING
3"	100%
No. 4	35% - 100%
No. 30	20% - 100%

DEPARTMENT OF PUBLIC WORKS - STANDARD DRAWINGS

TRENCH SECTION
OUTSIDE HMA PAVED SURFACE

Issued: August 2022	Scale: NTS
Revised:	Revision No:
Drawing No: U-4a	

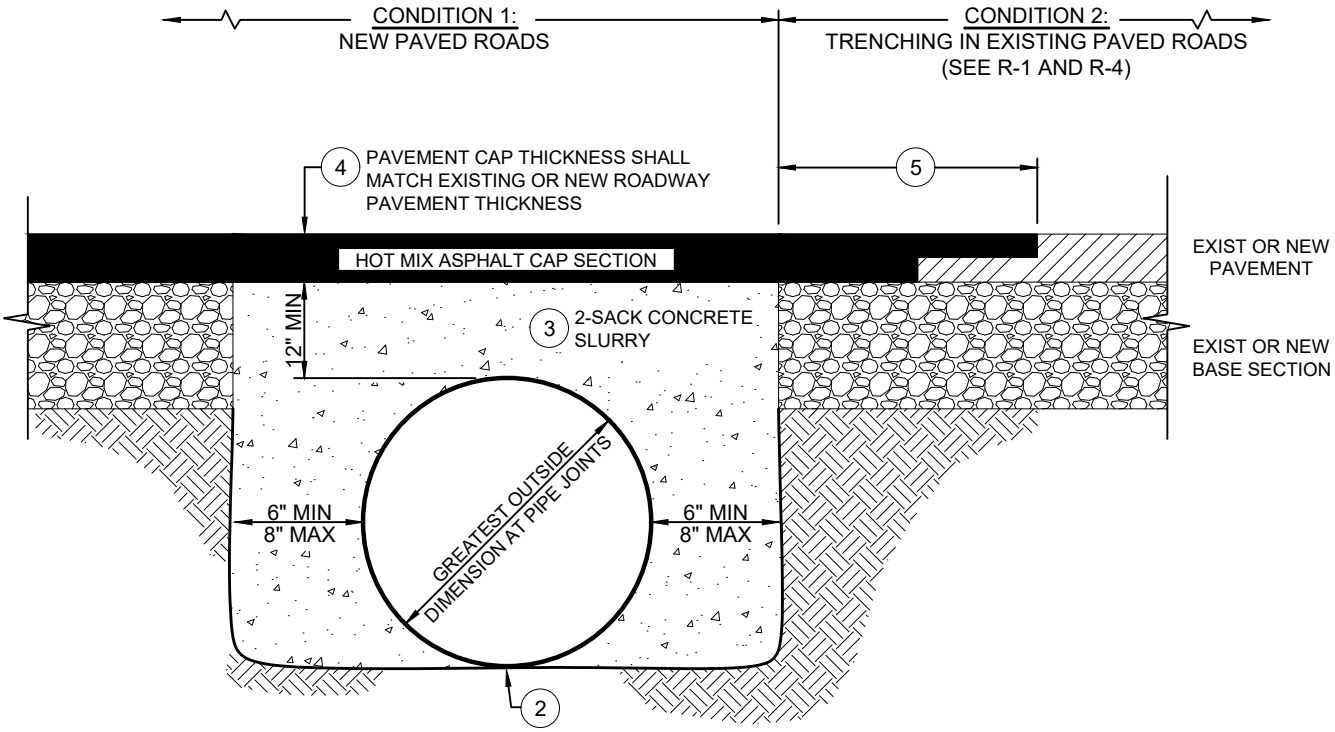

NOTES:

1. USE OF THIS STANDARD DRAWING REQUIRES PRIOR DEPARTMENT APPROVAL AND SHALL ONLY BE ALLOWED IF REQUIRED COVER CANNOT BE ATTAINED.
2. PIPE SHALL BE PLACED ON UNDISTURBED NATIVE MATERIAL UNLESS EXISTING SOILS CONDITIONS REQUIRE ADDITIONAL MEASURES.
3. CONCRETE SLURRY TRENCH BACKFILL SHALL CONFORM TO STATE STANDARD SPECIFICATIONS, 188 LBS/CY CEMENTITIOUS MATERIAL [2 SACK], TO SURFACE OF BASE COURSE SECTION. DO NOT PLACE AGGREGATE BASE ABOVE SLURRY BACKFILL.
4. HOT MIX ASPHALT (HMA) PAVEMENT THICKNESS TO MATCH EXISTING PAVEMENT SECTION OR MATCH APPROVED PAVEMENT THICKNESS FOR NEW ROADS.
5. WHEN TRENCHING INTO EXISTING STRUCTURAL SECTION PAVEMENT REPAIR SHALL BE IN ACCORDANCE WITH STANDARD DRAWINGS R-1 AND R-4.
6. PIPE SHALL BE SECURED IN PLACE TO KEEP LINE AND GRADE WHILE CONCRETE SLURRY IS PLACED AND UNTIL THE SLURRY HAS SET.
7. THE DEPARTMENT MAY REQUIRE ADDITIONAL WORK WHEN TRENCHING IN EXISTING ROADS HAVING CONCRETE STRUCTURAL SECTIONS.

DEPARTMENT OF PUBLIC WORKS - STANDARD DRAWINGS

TRENCH SECTION
SHALLOW TRENCH

Issued:	Scale:
August 2022	NTS
Revised:	Revision No:
Drawing No:	U-4b

TABLE 1

Pipe Dia (in)	Pipe Class	Nom. I.D. (in)	Area (A) (sq in)	THRUST (T) AT FITTING, lbs				
				TEES	90° BEND	45° BEND	22.5° BEND	11.25° BEND
4"	PVC Class 165 (DR 25)	4.39	15	3,254	4,602	2,491	1,270	638
4"	PVC Class 235 (DR 18)	4.23	14	4,005	5,664	3,065	1,563	785
4"	PVC Class 305 (DR 14)	4.07	13	4,619	6,532	3,535	1,802	905
6"	PVC Class 165 (DR 25)	6.31	31	6,723	9,508	5,146	2,623	1,318
6"	PVC Class 235 (DR 18)	6.09	29	8,302	11,740	6,354	3,239	1,627
6"	PVC Class 305 (DR 14)	5.86	27	9,574	13,540	7,328	3,736	1,877
8"	PVC Class 165 (DR 25)	8.28	54	11,577	16,372	8,861	4,517	2,269
8"	PVC Class 235 (DR 18)	7.98	50	14,254	20,158	10,910	5,562	2,794
8"	PVC Class 305 (DR 14)	7.68	46	16,445	23,257	12,587	6,417	3,224
10"	PVC Class 165 (DR 25)	10.16	81	17,431	24,651	13,341	6,801	3,417
10"	PVC Class 235 (DR 18)	9.79	75	21,454	30,340	16,420	8,371	4,206
10"	PVC Class 305 (DR 14)	9.42	70	24,741	34,989	18,936	9,654	4,850
12"	PVC Class 165 (DR 25)	12.08	115	24,641	34,848	18,860	9,615	4,831
12"	PVC Class 235 (DR 18)	11.65	107	30,380	42,964	23,252	11,854	5,956
12"	PVC Class 305 (DR 14)	11.2	99	34,975	49,462	26,768	13,646	6,856
	AWWA PVC C-900 PIPE			BASED ON P = 165 + 50 = 215 psi BASED ON P = 235 + 50 = 285 psi BASED ON P = 305 + 50 = 355 psi				

TABLE 2

HORIZONTAL BEARING STRENGTHS FOR COMMON SOILS	
SOIL TYPE	HORIZONTAL BEARING STRENGTH (Sb), lbs/sf
MUCK	0
SOFT CLAY	500
SAND	1,000
SAND & GRAVEL	1,500
SAND & GRAVEL CEMENTED WITH CLAY	2,000

NOTES:

1. ALTHOUGH THE ABOVE BEARING STRENGTH VALUES HAVE BEEN USED SUCCESSFULLY IN THE DESIGN OF THRUST BLOCKS AND ARE CONSIDERED TO BE CONSERVATIVE, THEIR ACCURACY IS TOTALLY DEPENDENT ON ACCURATE SOIL IDENTIFICATION AND EVALUATION. THE ULTIMATE RESPONSIBILITY FOR SELECTING THE PROPER BEARING STRENGTH OF A PARTICULAR SOIL TYPE SHALL BE THE RESPONSIBILITY OF THE PROJECT ENGINEER.
2. ALL THRUST BLOCK AREAS SHALL BE PROVIDED ON THE APPROVED PLANS.
3. CONCRETE THRUST BLOCKS SHALL CONFORM TO STATE STANDARD SPECIFICATIONS, 470 LBS/CY CEMENTITIOUS MATERIAL [5 SACK].
4. THRUST RESTRAINT FOR VERTICAL BENDS SHALL USE RESTRAINED JOINT FITTINGS INSTEAD OF THRUST BLOCKS.

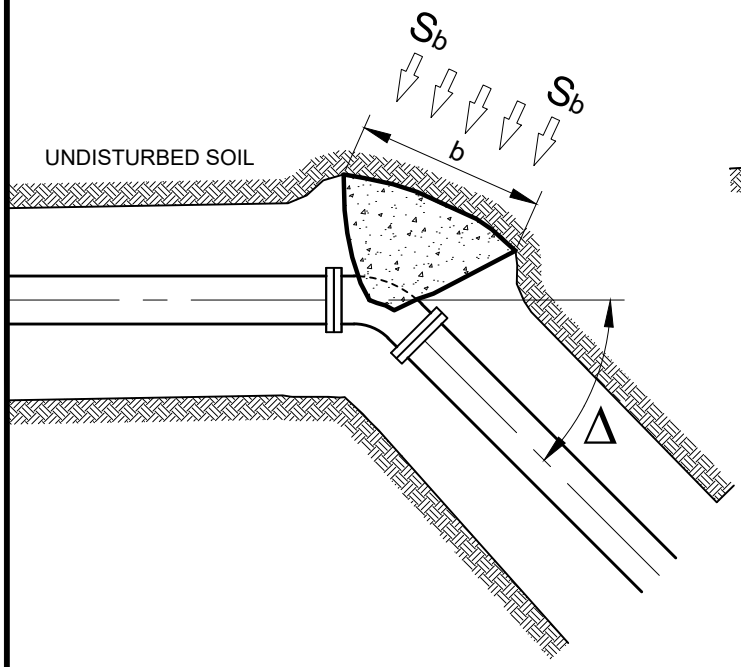

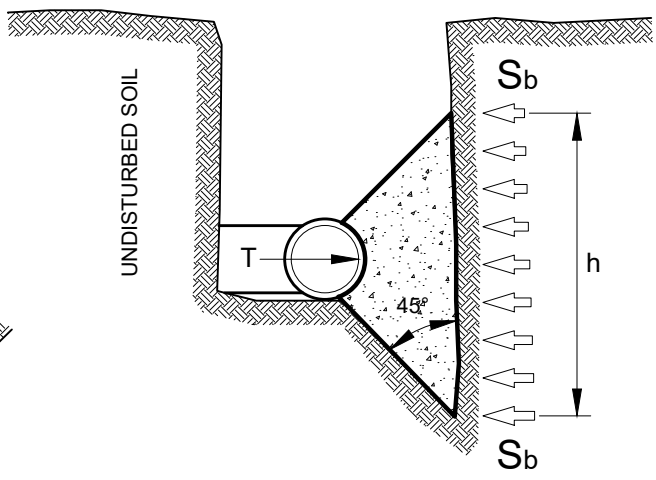

LEGEND:
T = THRUST AT FITTING (lbs) [TABLE 1]
S_b = SOIL BEARING PRESSURE (psf) [TABLE 2]
A = INTERNAL AREA (sq in) [TABLE 1]
P = INTERNAL PRESSURE (psi)
Δ = HORIZONTAL DEFLECTION ANGLE (degrees)
Sf = FACTOR OF SAFETY [1.5 FOR THRUST BLOCK DESIGN, TYP]
h = THRUST BLOCK HEIGHT (ft)
b = THRUST BLOCK WIDTH (ft)
A_b = MINIMUM THRUST BLOCK AREA (sq ft)

EQUATIONS:

THRUST AT FITTINGS:

[1] $T = (P)(A)$

THRUST AT HORIZONTAL BEND:

[2] $T = 2(P)(A)\sin(\Delta/2)$

MINIMUM BEARING (THRUST) BLOCK AREA:

[3] $A_b = (h)(b) = [(Sf)(T)]/S_b$

EXAMPLE: DETERMINE THE THRUST BLOCK AREA FOR A 90° BEND, 8" CLASS 165 PIPE IN SAND.

(STEP 1): PRESSURE = 165 + 50 (TEST PRESSURE) = 215 psi. CHOOSE T = 16,372 lbs FROM TABLE 1 SHEET 1/2 (USE EQUATION [2] IF PIPE HAS DIFFERENT INSIDE DIAMETER].

(STEP 2): DETERMINE Sb FROM TABLE 2, SHEET 1/2.

(STEP 3): USE INFORMATION TO CALCULATE Ab USING EQUATION [3]

RESULT: Ab = [Sf(T)/Sb = [(1.5)(16,372)]/1,000] = 24.6 sq ft

DEPARTMENT OF PUBLIC WORKS - STANDARD DRAWINGS

WATERLINE
THRUST BLOCK REQUIREMENTS

Issued: August 2022	Scale: NTS
Revised:	Revision No:
Drawing No: W-1a	

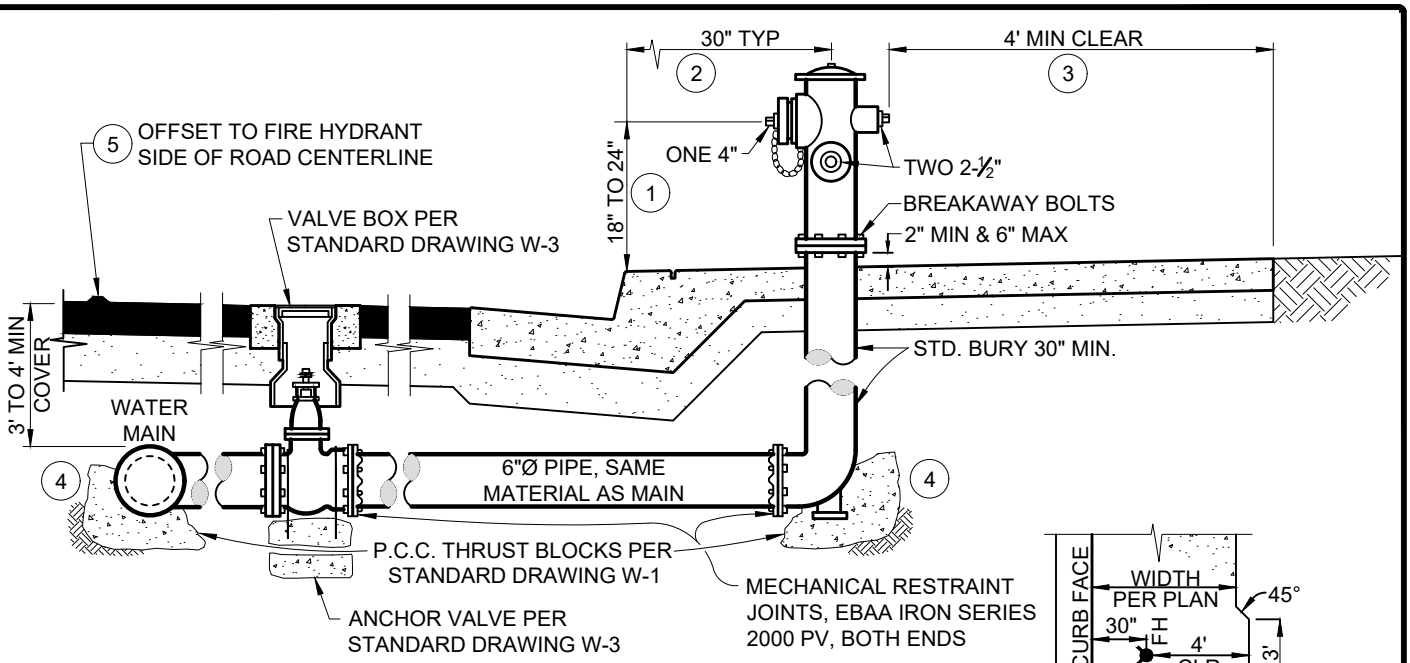

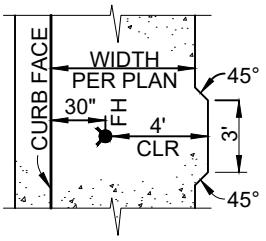

CONDITION 1
NTS

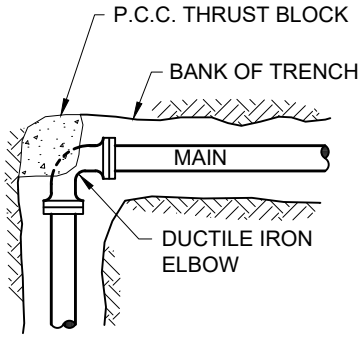

DETAIL AT BEND
NTS

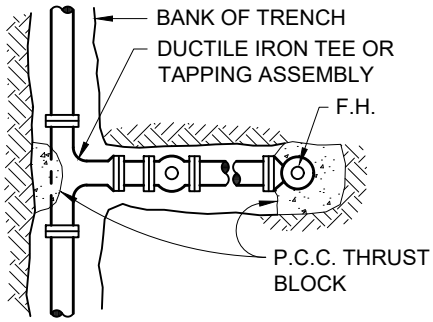

DETAIL AT FIRE HYDRANT
NTS

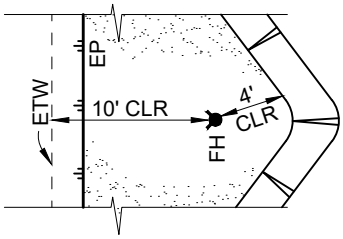

CONDITION 2
NTS

NOTES:

1. HEIGHT SHALL BE MEASURED FROM EDGE OF PAVEMENT WHEN CONCRETE CURB OR ASPHALT DIKE ARE NOT REQUIRED PER THE DESIGN STANDARDS.
2. DISTANCE SHALL BE INCREASED TO 10-FEET CLEAR FROM THE EDGE OF TRAVELED WAY (ETW) ON RURAL ROADS (SEE U-1).
3. IN RURAL AREAS A 4-FEET MINIMUM RADIUS CLEAR AND LEVEL ZONE SURROUNDING THE FIRE HYDRANT SHALL BE REQUIRED.
4. CONCRETE THRUST BLOCKS SHALL CONFORM TO STATE STANDARD SPECIFICATIONS, 470 LBS/CY CEMENTITIOUS MATERIAL [5 SACK], POURED AGAINST UNDISTURBED SOIL AND SHIELDED FROM FLANGES AND BOLTS.
5. EACH HYDRANT SHALL BE IDENTIFIED BY A REFLECTORIZED BLUE RAISED PAVEMENT MARKER PER SECTION 10.301c OF THE UNIFORM FIRE CODE.
6. THE HYDRANT CAP AND OUTLET NOZZLE SHALL BE PAINTED IN ACCORDANCE WITH SECTION 6.2.1.D.2.
7. THE CONCRETE CURB OR ASPHALT DIKE SHALL BE PAINTED RED 15-FEET EITHER SIDE OF THE FIRE HYDRANT.
8. HYDRANT SHALL BE CLOW F960, OR APPROVED EQUAL.
9. EACH HYDRANT SHALL HAVE TWO 2-1/2" OUTLETS AND ONE 4" OUTLET WITH EXTERNAL NSF THREAD.
10. ALL FITTINGS SHALL BE CEMENT MORTAR LINED IN ACCORDANCE WITH AWWA STANDARD C-104.
11. HYDRANT LATERAL SHALL BE OF THE SAME MATERIAL AS THE MAIN.
12. 14-GAUGE INSULATED COPPER TRACER WIRE SHALL BE LAID IN THE TRENCH ABOVE THE PIPE, BROUGHT ABOVE GRADE AND SECURED TO THE HYDRANT BOLT FLANGE.
13. COLOR CODED BLUE 3-INCH WIDE POLYETHYLENE NON-DETECTABLE TAPE MARKED "CAUTION BURIED WATER LINE BELOW" SHALL BE BURIED IN THE TRENCH AND ABOVE THE PIPE AND TRACER WIRE.

DEPARTMENT OF PUBLIC WORKS - STANDARD DRAWINGS

WATERLINE

FIRE HYDRANT INSTALLATION

Issued: August 2022	Scale: NTS
Revised:	Revision No:
Drawing No: W-2	

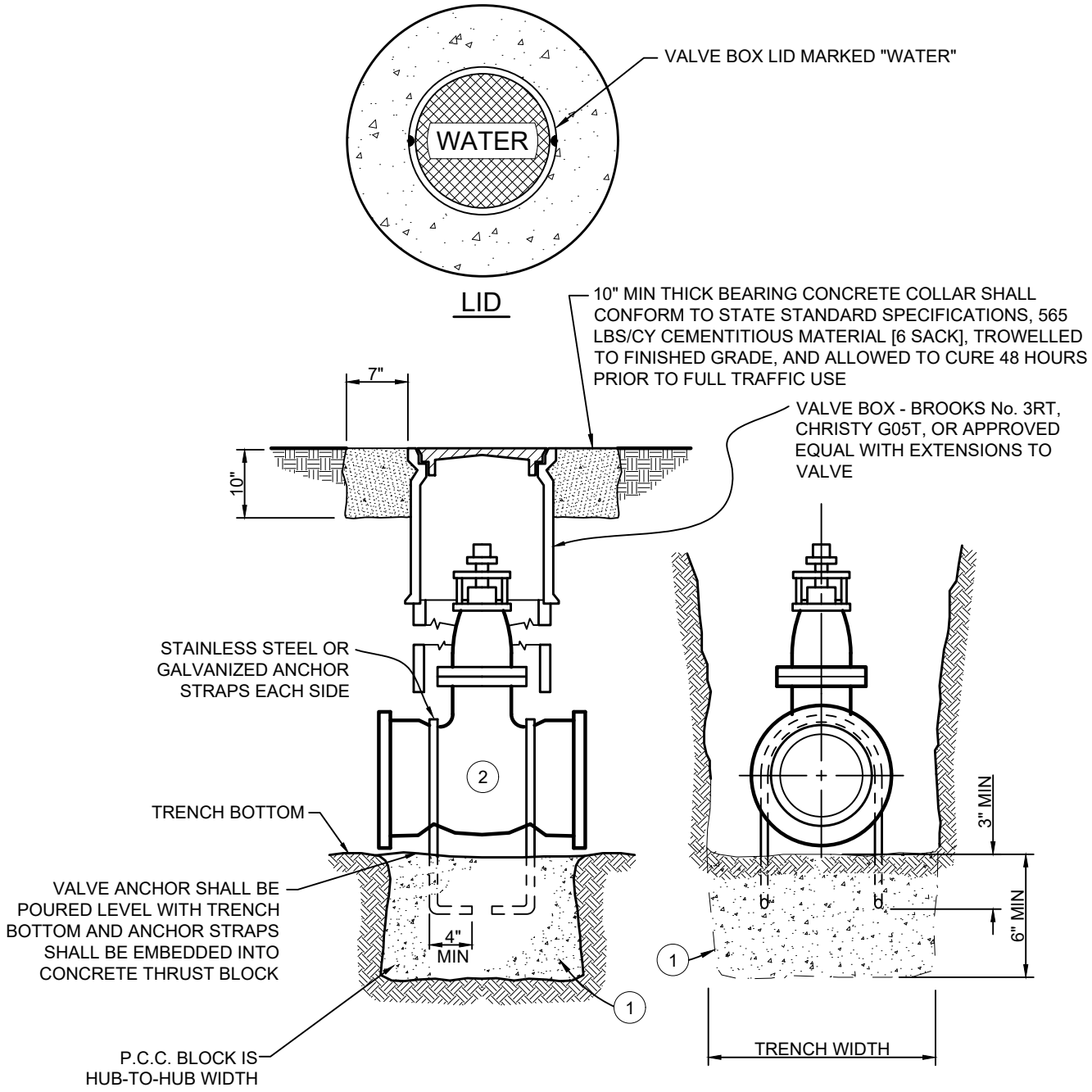

NOTES:

1. CONCRETE THRUST BLOCKS SHALL CONFORM TO STATE STANDARD SPECIFICATIONS, 470 LBS/CY CEMENTITIOUS MATERIAL [5 SACK], AND POURED AGAINST UNDISTURBED NATIVE SOIL.
2. VALVES SHALL OPEN TO THE LEFT, HAVE NON-RISING STEM WITH O-RING SEALS, RESILIENT WEDGE, RESILIENT SEAT WITH FULLY ENCAPSULATED GATE, EPOXY COATED INSIDE AND OUTSIDE, FULL SIZE WATERWAY, 200 PSI WORKING PRESSURE, AND MEET AWWA C-509. VALVES SHALL HAVE TYPE 316 STAINLESS STEEL BOLTS AND NUTS FOR THE STUFFING BOX AND BONNET, AND SHALL BE CLOW 2639/2640, MUELLER A-2361 RESILIENT WEDGE GATE VALVES THIN WALL, OR APPROVED EQUAL.
3. ALL MATERIALS AND INSTALLATION SHALL CONFORM WITH THE APPLICABLE SECTIONS OF THE DESIGN STANDARDS.
4. ALL FITTINGS SHALL BE WRAPPED IN POLYETHYLENE SHEET AND ALL FLANGES AND BOLTS SHALL BE SHIELDED FROM CONCRETE PER THE DESIGN STANDARDS.
5. UNDER NO CIRCUMSTANCES SHALL UTILITY LIDS AND CONCRETE COLLARS BE LOCATED WITHIN CURBS, GUTTERS, SIDEWALKS, DRIVEWAY APRONS, CURB RAMPS, OR CROSS GUTTERS.

DEPARTMENT OF PUBLIC WORKS - STANDARD DRAWINGS

WATERLINE

VALVE ANCHOR & BOX

Issued:	Scale:
August 2022	NTS
Revised:	Revision No:
Drawing No:	W-3

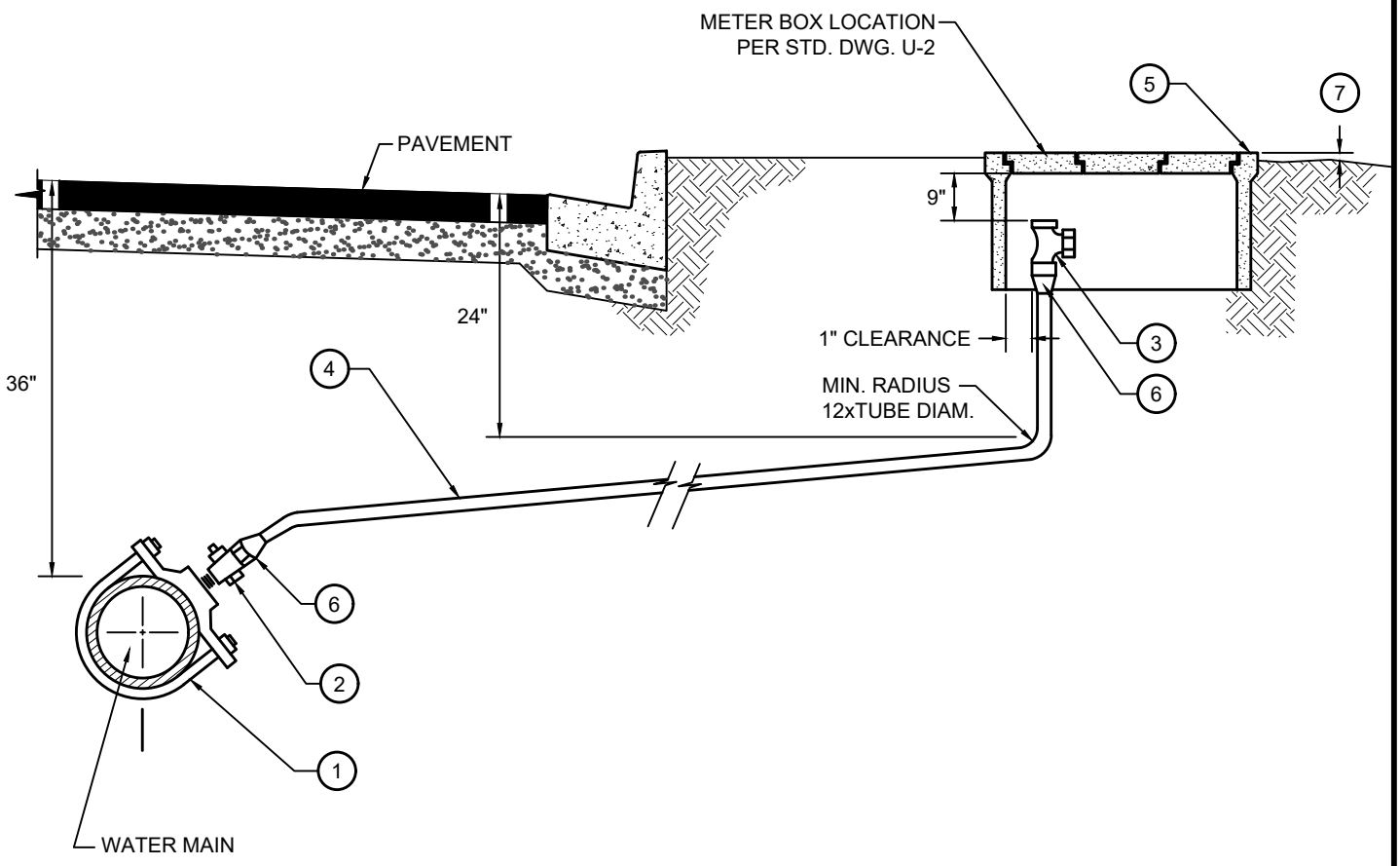

NOTES:

1. FOR EXISTING STEEL AND ACP WATER MAINS USE BRONZE SERVICE SADDLE, DOUBLE STRAP MUELLER BR2B 0899 IP 077 OR 100, FORD 202B, OR APPROVED EQUAL. FOR NEW C900 PVC WATER MAINS USE DOUBLE STRAP WITH BAND MUELLER BR2S, FORD 202BS, OR APPROVED EQUAL.
2. CORPORATION STOP WITH IP THREADS, MUELLER H-10012N, OR APPROVED EQUAL.
3. ANGLE METER STOP, JONES J-1966W, 3/4-INCH OR 1-INCH, OR APPROVED EQUAL.
4. POLYETHYLENE PIPE 1-INCH MIN. I.D.
5. METER BOX, CHRISTY B12 WITH B12S READER CONCRETE COVER, OR APPROVED EQUAL.
6. MUELLER INSTA-TITE CONNECTION H-15426 (MALE) OR APPROVED EQUAL H-15456 (FEMALE).
7. IN UNPAVED AREA SET METER BOX 1-INCH TO 1.5-INCHES ABOVE FINISHED GRADE.
8. IF SAMPLE STATION IS PROPOSED TO COINCIDE WITH WATER SERVICE CONNECTION LOCATION, INSTALL NEW SAMPLE STATION PER W-7a.
9. WATER METER AND CUSTOMER SIDE SHUT OFF VALVE TO BE INSTALLED BY THE WATER PURVEYOR.
10. CORPORATION STOPS SHALL NOT BE SPACED CLOSER THAN 12-INCHES MEASURED ALONG THE CENTERLINE OF THE PIPE.
11. SERVICES LARGER THAN 1-INCH MAY BE PVC SCHEDULE 80 PIPE.
12. 14-GAUGE INSULATED COPPER TRACER WIRE SHALL BE LAID IN THE TRENCH ABOVE THE PIPE AND BROUGHT ABOVE GRADE THROUGH ANY METER OR VALVE BOXES.
13. COLOR CODED BLUE 3-INCHES WIDE POLYETHYLENE NON-DETECTABLE TAPE MARKED "CAUTION BURIED WATER LINE BELOW" SHALL BE BURIED IN THE TRENCH AND ABOVE THE PIPE AND TRACER WIRE.

DEPARTMENT OF PUBLIC WORKS - STANDARD DRAWINGS

WATERLINE

WATER SERVICE CONNECTION

Issued: August 2022	Scale: NTS
Revised:	Revision No:
Drawing No: W-4	

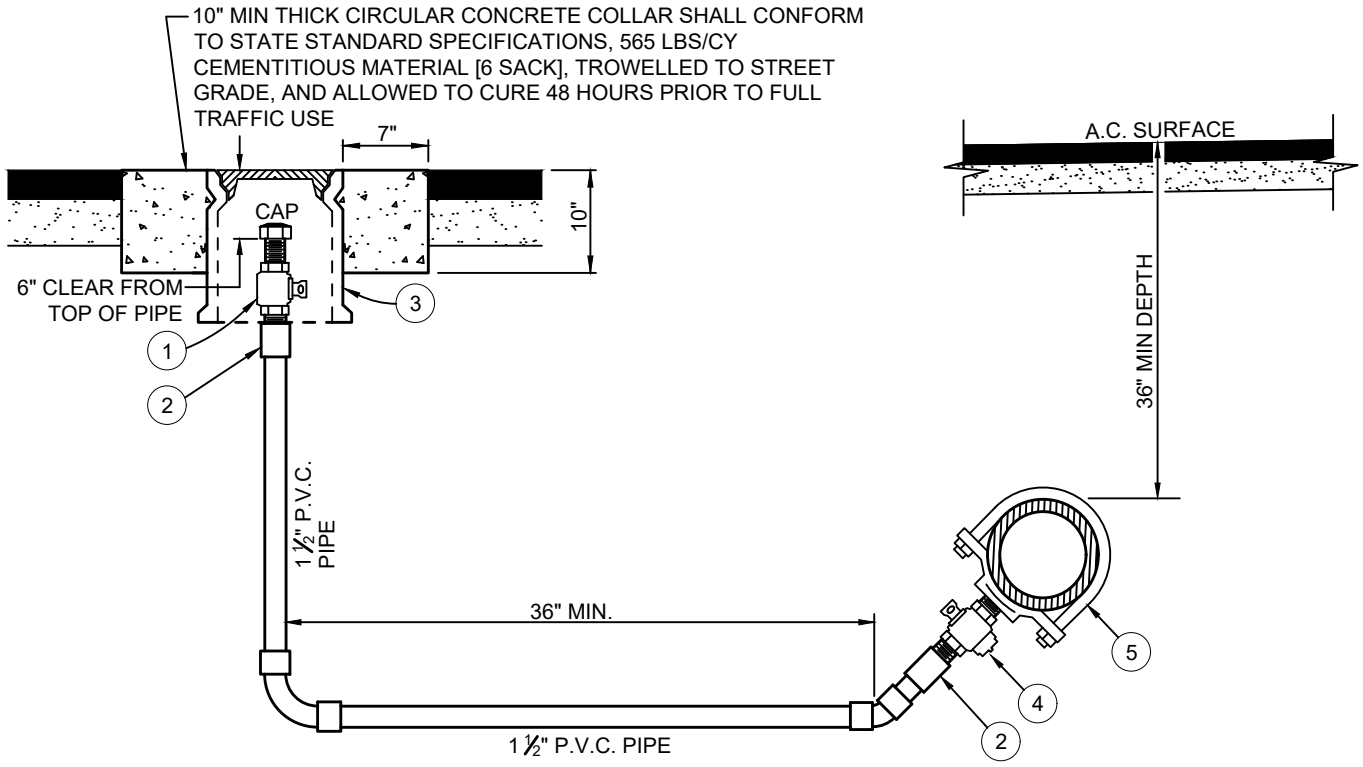

ON-RUN CONNECTION OR DEAD END

NOTES:

1. 14-GAUGE INSULATED COPPER TRACER WIRE SHALL BE LAID IN THE TRENCH ABOVE THE PIPE AND BROUGHT ABOVE GRADE THROUGH ANY METER OR VALVE BOXES.
2. COLOR CODED BLUE 3-INCHES WIDE POLYETHYLENE NON-DETECTABLE TAPE MARKED "CAUTION BURIED WATER LINE BELOW" SHALL BE BURIED IN THE TRENCH AND ABOVE THE PIPE AND TRACER WIRE.
3. UNDER NO CIRCUMSTANCES SHALL UTILITY LIDS AND CONCRETE COLLARS BE LOCATED WITHIN CURBS, GUTTERS, SIDEWALKS, DRIVEWAY APRONS, CURB RAMPS, OR CROSS GUTTERS.

ITEM NO.	NO. REQ'D.	SIZE AND DESCRIPTION	MATERIAL SPECIFICATION
1	1	1-1/2" CURB STOP WITH LOCKWING	JAMES JONES J-182 WITH LOCKWING, MUELLER, O.A.E.
2	2	1-1/2" ADAPTER	I.P. THREAD-P.V.C. SLIP
3	1	VALVE BOX WITH CAST IRON LID	CHRISTY G05T, BROOKS 3RT, O.A.E.
4	1	1-1/2" CORPORATION STOP	MUELLER H-10012N, JAMES JONES E-41, O.A.E.
5	1	SERVICE SADDLE (STEEL PIPE)	MUELLER BR2B 0899 IP 075 OR 100, FORD 202B, O.A.E.
		SERVICE SADDLE (AC PIPE)	MUELLER BR2B 0899 IP 075 OR 100, FORD 202B, O.A.E.
		SERVICE SADDLE (C900 PVC PIPE)	MUELLER BR2S; FORD 202BS; O.A.E.

O.A.E. = "OR APPROVED EQUAL"

DEPARTMENT OF PUBLIC WORKS - STANDARD DRAWINGS

WATERLINE

1-1/2" BLOW-OFF ASSEMBLY

Issued: August 2022	Scale: NTS
Revised:	Revision No:
Drawing No: W-5	

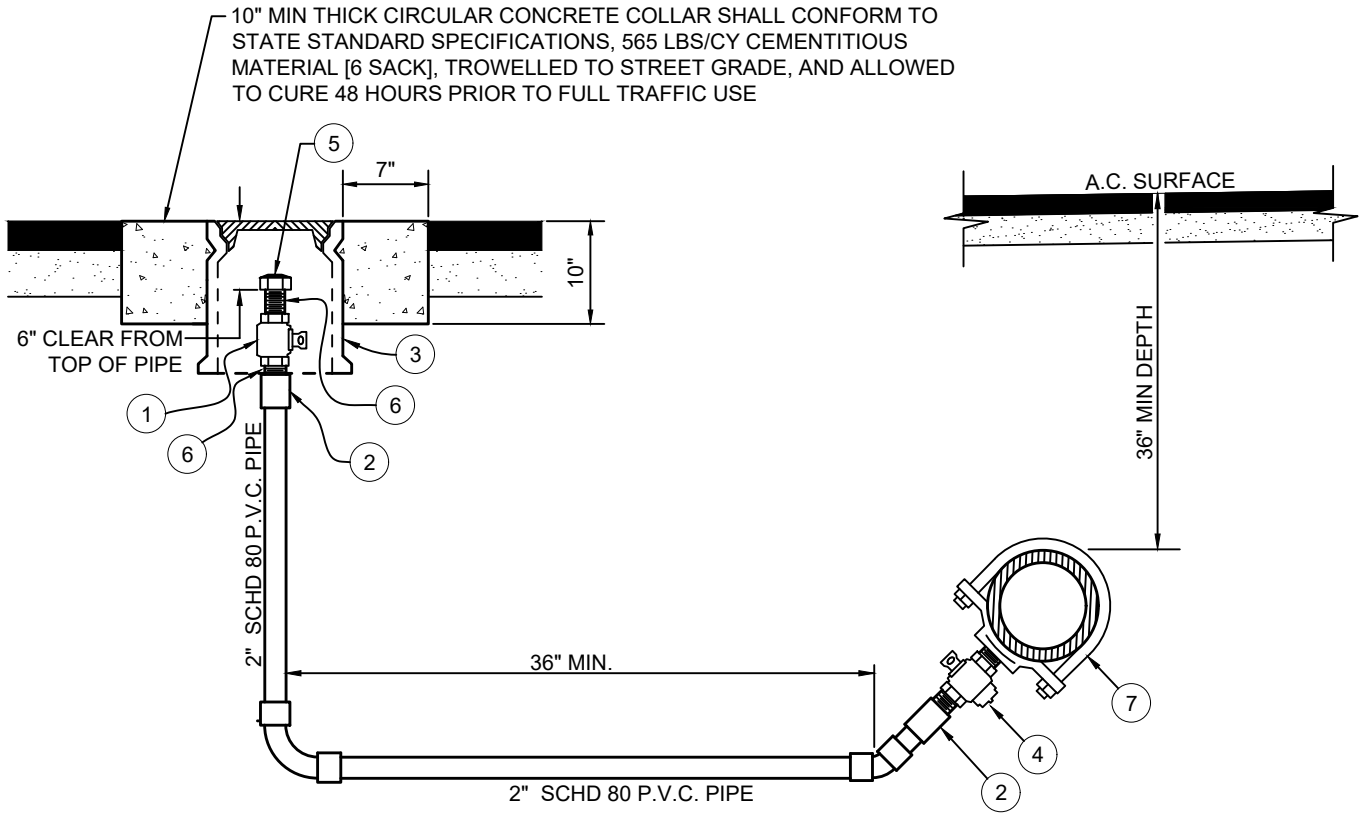

ON-RUN CONNECTION OR DEAD END

NOTES:

1. 14-GAUGE INSULATED COPPER TRACER WIRE SHALL BE LAID IN THE TRENCH ABOVE THE PIPE AND BROUGHT ABOVE GRADE THROUGH ANY METER OR VALVE BOXES.
2. COLOR CODED BLUE 3-INCHES WIDE POLYETHYLENE NON-DETECTABLE TAPE MARKED "CAUTION BURIED WATER LINE BELOW" SHALL BE BURIED IN THE TRENCH AND ABOVE THE PIPE AND TRACER WIRE.
3. UNDER NO CIRCUMSTANCES SHALL UTILITY LIDS AND CONCRETE COLLARS BE LOCATED WITHIN CURBS, GUTTERS, SIDEWALKS, DRIVEWAY APRONS, CURB RAMPS, OR CROSS GUTTERS.

ITEM NO.	QTY. REQ'D.	SIZE AND DESCRIPTION	MATERIAL SPECIFICATION
1	1	2" CURB STOP WITH LOCKWING	JAMES JONES J-182 WITH LOCKWING, MUELLER, O.A.E.
2	2	2" ADAPTER	I.P. THREAD x P.V.C. SLIP
3	1	VALVE BOX WITH CAST IRON LID	CHRISTY G05T, BROOKS 3-RT, O.A.E.
4	1	2" CORPORATION STOP	MUELLER H-10012N; JAMES JONES E-41, O.A.E.
5	1	2" IP GALV. CAP	
6	2	2" IP GALV. NIPPLE	
7	1	SERVICE SADDLE (STEEL PIPE)	MUELLER BR2B 0899 IP 075 OR 100, FORD 202B, O.A.E.
		SERVICE SADDLE (AC PIPE)	MUELLER BR2B 0899 IP 075 OR 100, FORD 202B, O.A.E.
		SERVICE SADDLE (C900 PVC PIPE)	MUELLER BR2S; FORD 202BS; O.A.E.

O.A.E. = "OR APPROVED EQUAL"

DEPARTMENT OF PUBLIC WORKS - STANDARD DRAWINGS

WATERLINE

2" BLOW-OFF ASSEMBLY

Issued: August 2022	Scale: NTS
Revised:	Revision No:
Drawing No: W-5a	

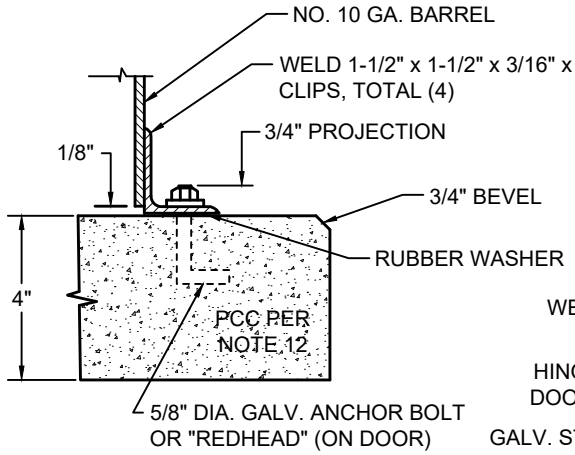

DETAIL "A"

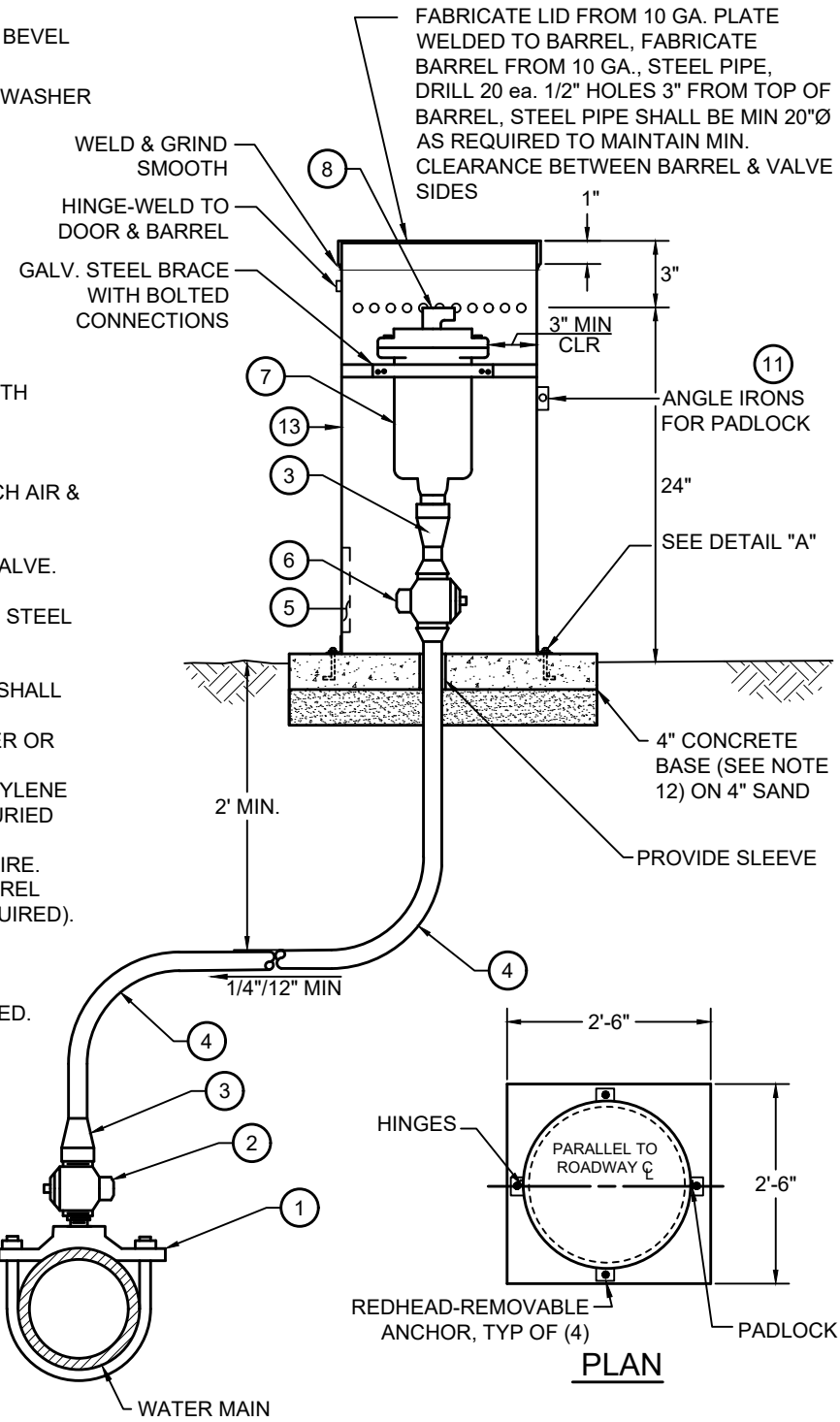

NOTES:

1. BRONZE SERVICE SADDLE, DOUBLE STRAP, WITH AWWA I.P. THREADS.
2. CORPORATION STOP WITH I.P. THREADS.
3. MUELLER INSTA-TITE CONNECTION.
4. POLYETHYLENE PIPE, PIPE SIZE SHOULD MATCH AIR & VACUUM RELIEF VALVE SIZE AS SPECIFIED IN SECTION 6.2.1.C.2 OF THESE STANDARDS.
5. PROVIDE DOOR IN BARREL TO ACCESS BALL VALVE.
6. BALL VALVE.
7. AIR & VACUUM RELIEF VALVE WITH STAINLESS STEEL TRIM.
8. SCH. 80 PVC ELBOW.
9. 14-GAUGE INSULATED COPPER TRACER WIRE SHALL BE LAID IN THE TRENCH ABOVE THE PIPE AND BROUGHT ABOVE GRADE THROUGH ANY METER OR VALVE BOXES.
10. COLOR CODED BLUE 3-INCHES WIDE POLYETHYLENE NON-DETECTABLE TAPE MARKED "CAUTION BURIED WATER LINE BELOW" SHALL BE BURIED IN THE TRENCH AND ABOVE THE PIPE AND TRACER WIRE.
11. ANGLE 1-1/2"x1-1/2"x3/16" LONG. WELD TO BARREL AND DOOR WITH HOLES FOR PADLOCK (2 REQUIRED).
12. CONCRETE BASE SHALL CONFORM TO STATE STANDARD 90-1.01, 565 LBS/CY CEMENTITIOUS MATERIAL [6 SACK].
13. AIR VACUUM SHALL BE HOT DIPPED GALVANIZED.

PLAN

SPECIAL NOTE:
SECURELY ATTACH NO. 12 COPPER WIRE TO CORPORATION STOP, RUN PARALLEL WITH PIPE AND ATTACH TO ANGLE STOP.

DEPARTMENT OF PUBLIC WORKS - STANDARD DRAWINGS

WATERLINE

AIR & VACUUM RELIEF ASSEMBLY

Issued: August 2022	Scale: NTS
Revised:	Revision No:
Drawing No: W-6	

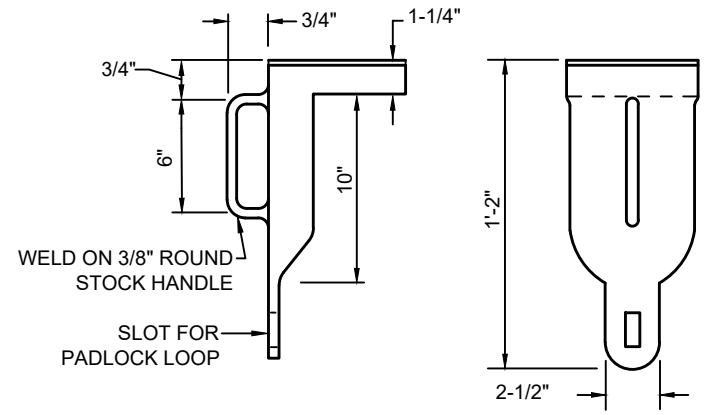

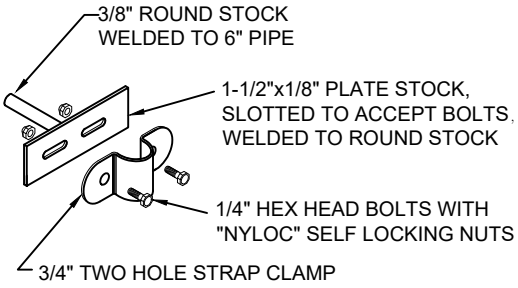

SUPPORT BRACKET

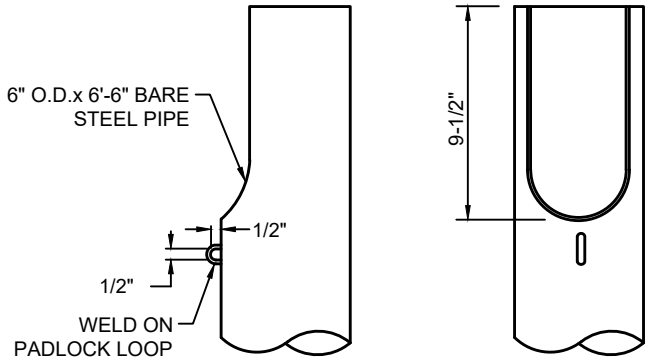

STAND AND COVER

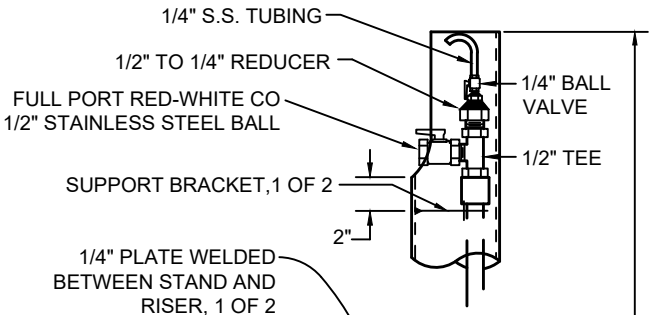

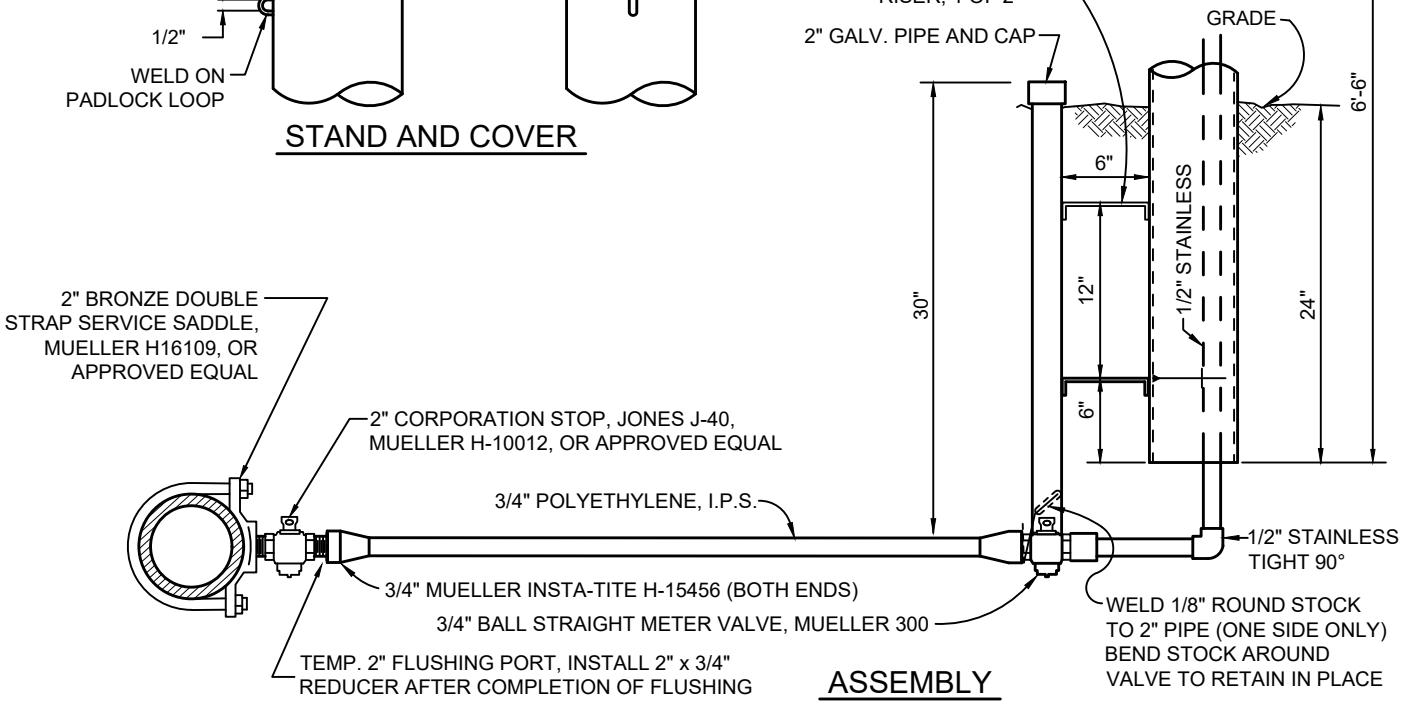

ASSEMBLY

NOTES:

1. LOCATION OF SAMPLE STATION TO COINCIDE WITH PROPOSED SERVICE LOCATION.
2. SURFACE PREPARATION AND PAINT:
   a. WELD ALL SUPPORT BRACKETS TO PIPE PRIOR TO PAINTING.
   b. PREPARE BOTH INSIDE AND OUTSIDE PIPE SURFACES BY WIRE BRUSH CLEANING.
   c. INSIDE AND OUTSIDE SURFACES SHALL BE PRIMER COATED WITH TWO COATS. PRIMER SHALL BE "RUST-OLEUM CLEAN METAL PRIMER" OR APPROVED EQUAL.
   d. PAINT SHALL BE RUST-OLEUM INDUSTRIAL ENAMEL COLOR "SAFETY BLUE" OR APPROVED EQUAL, TWO COATS OF PAINT ARE REQUIRED.
3. 14-GAUGE INSULATED COPPER TRACER WIRE SHALL BE LAID IN THE TRENCH ABOVE THE PIPE AND BROUGHT ABOVE GRADE THROUGH ANY METER OR VALVE BOXES.
4. COLOR CODED BLUE 3-INCHES WIDE POLYETHYLENE NON-DETECTABLE TAPE MARKED "CAUTION BURIED WATER LINE BELOW" SHALL BE BURIED IN THE TRENCH AND ABOVE THE PIPE AND TRACER WIRE.

DEPARTMENT OF PUBLIC WORKS - STANDARD DRAWINGS

WATERLINE
SAMPLING STATION

Issued: August 2022	Scale: NTS
Revised:	Revision No:
Drawing No: W-7	

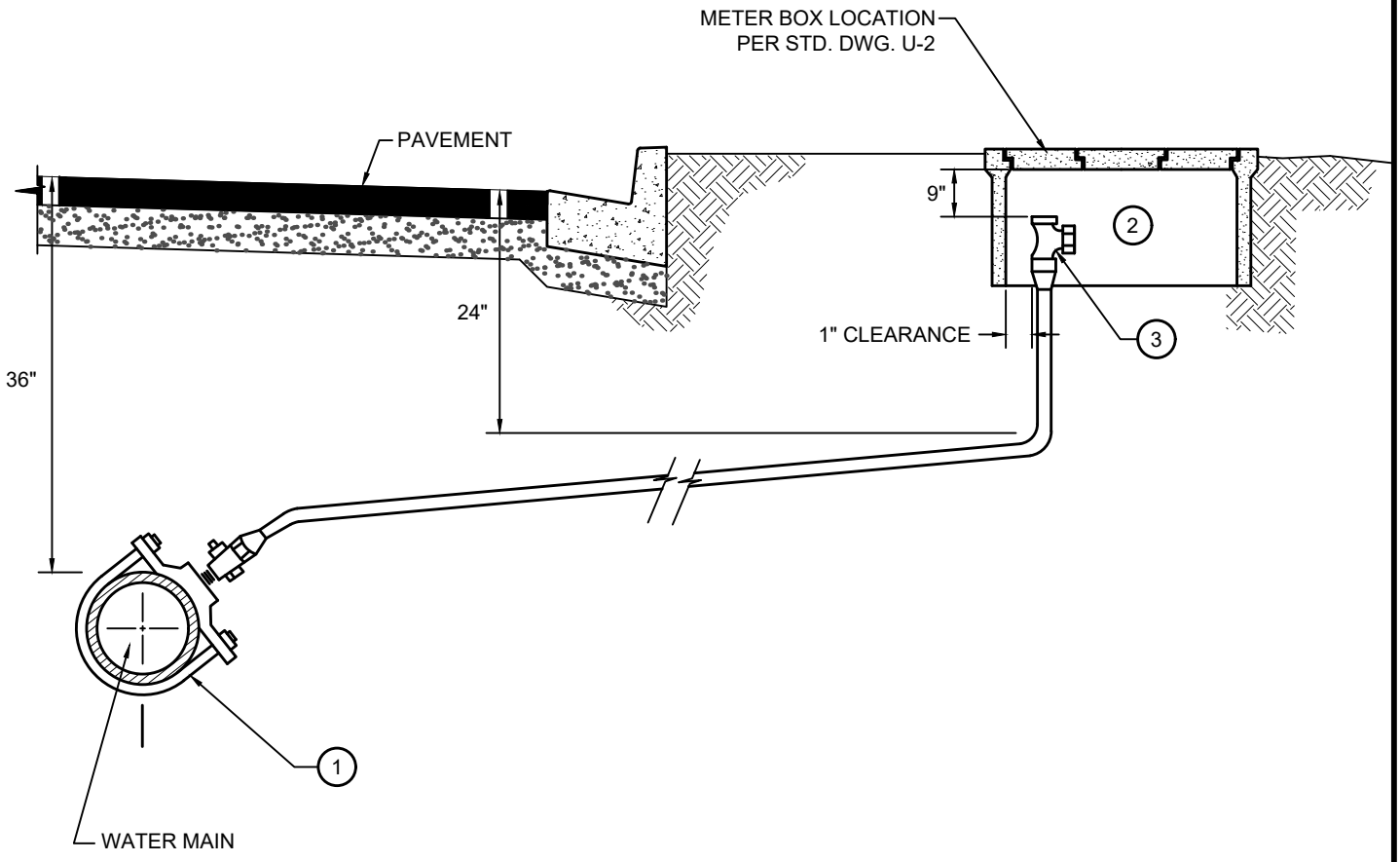

NOTES:

1. LOCATION OF SAMPLE STATION TO COINCIDE WITH PROPOSED SERVICE LOCATION. SAMPLE STATION TO BE INSTALLED USING SAME WATER SERVICE CONNECTION, AND IN SAME BOX AS PROPOSED WATER SERVICE. REFER TO U-2 & W-4 DRAWINGS.
2. SAMPLE STATION SHALL BE WATER PLUS CORP. MODEL 1500, BELOW GRADE SAMPLING STATION.
3. SAMPLE STATION SHALL BE CONNECTED AT ANGLE METER STOP.
4. WATER METER SHALL BE SET, AND CUSTOMER SIDE SHUT OFF VALVE SHALL BE INSTALLED BY THE WATER PURVEYOR. WORK TO BE COMPLETED AFTER WATER SERVICE APPLICATION HAS BEEN APPROVED AND ALL CONNECTION FEES PAID.

DEPARTMENT OF PUBLIC WORKS - STANDARD DRAWINGS

WATERLINE

SAMPLING STATION, BELOW GRADE

Issued:	Scale:
August 2022	NTS
Revised:	Revision No:
Drawing No:	W-7a

NOTES:

1. DIRECT CONNECTION TO THE EXISTING WATER SYSTEM SHALL NOT BE PERMITTED UNTIL THE NEW INSTALLATION HAS PASSED BACTERIA TESTING AND A PHYSICAL CHECK BY THE WATER QUALITY MANAGER. SEPARATION SHALL BE ACHIEVED BY THE INSTALLATION OF THE TEMPORARY BLOCKING DEVICE AS SHOWN HEREON.
2. PRESSURE TESTING AGAINST VALVES SHALL NOT BE ALLOWED. NEW VALVES SHALL BE SWABBED WITH CHLORINE PRIOR TO INSTALLATION.
3. WHEN TEMPORARY BLOCKING DEVICE IS REMOVED, THE CONTRACTOR SHALL ADJUST FITTING TO ELIMINATE 1/8-INCH GAP WITHOUT FORCING THE JOINT TOGETHER.
4. TEST PRESSURE SHALL BE 50 PSI GREATER THAN THE WORKING PRESSURE OF THE PIPE MEASURED AT THE LOWEST ELEVATION OF THE SYSTEM OR 150 PSI, WHICHEVER IS GREATER.

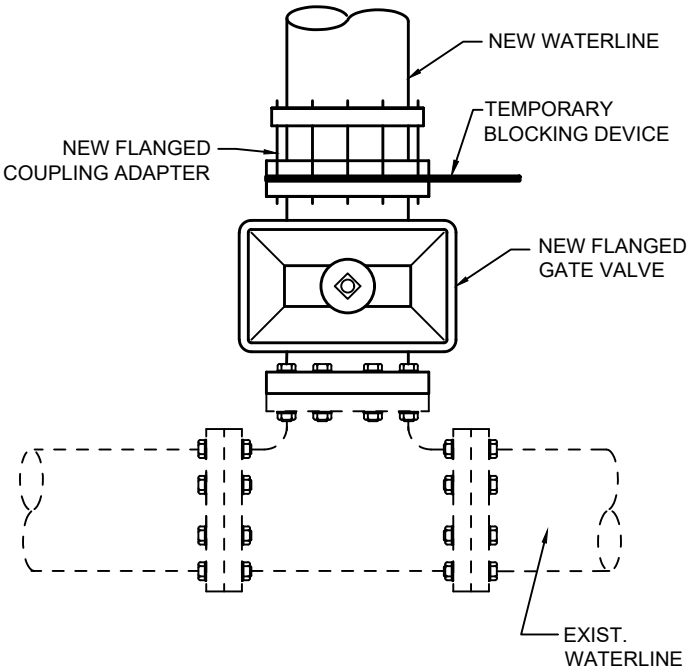

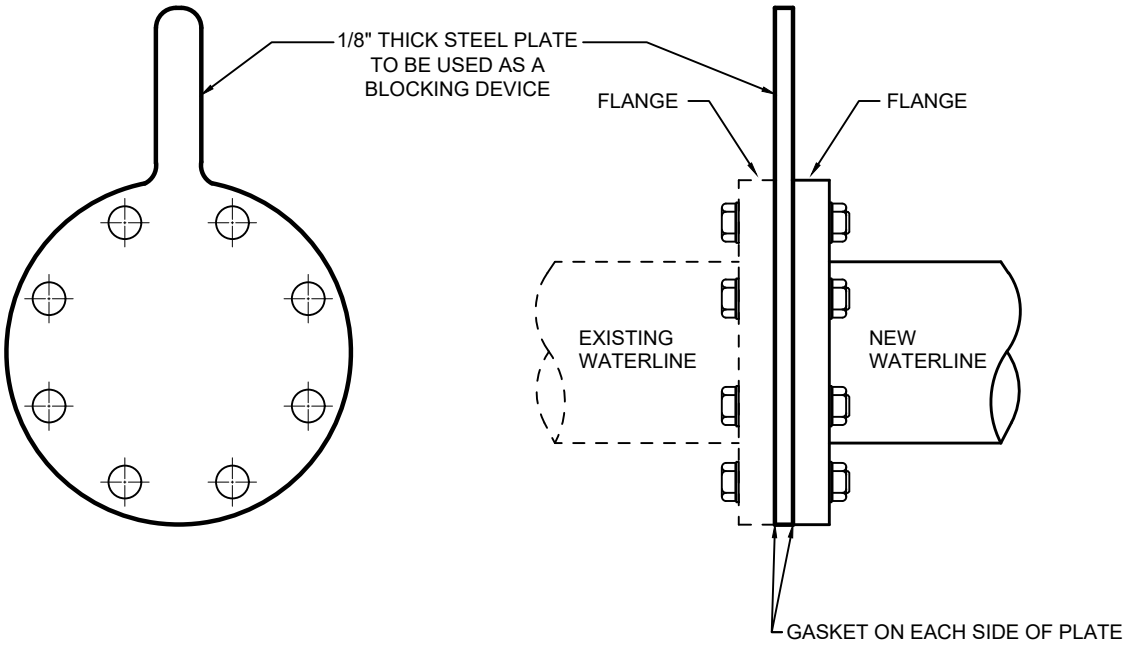

PROCEDURE FOR CONNECTING NEW WATERLINES TO EXISTING SYSTEM (ALTERNATIVE TO THE OLD INDUSTRIAL STANDARD METHOD): AT THE POINT OF CONNECTION TO THE EXISTING SYSTEM, ALL JOINTS BETWEEN FITTINGS AND VALVES SHALL BE FLANGED. ANY CHANGE REQUIRES WRITTEN APPROVAL FROM THE DEPARTMENT. AT THE JOINT THAT CONNECTS THE EXISTING SYSTEM TO THE NEW LINE, A BLOCKING DEVICE SHALL BE INSTALLED. THIS DEVICE SHALL BE CONSTRUCTED OF 1/8-INCH THICK STEEL PLATE. IT SHALL BE INSTALLED BETWEEN THE TWO FLANGES WITH A GASKET ON EACH SIDE. THIS WILL ALLOW ALL FITTINGS, VALVES, AND THE PIPELINE TO BE DISINFECTED AND PRESSURE TESTED AS ONE UNIT. AFTER THE NEW SYSTEM HAS MET ALL REQUIREMENTS, THE DEPARTMENT WILL ALLOW THE CONTRACTOR TO REMOVE THE BLOCKING DEVICE. THE DEVICE AND BOTH GASKETS ARE TO BE REMOVED AND A NEW GASKET SHALL BE INSTALLED BETWEEN THE FLANGES. THE NEW SYSTEM IS THEN IN SERVICE.

DEPARTMENT OF PUBLIC WORKS - STANDARD DRAWINGS

WATERLINE
CONNECTION DETAIL

Issued:	Scale:
August 2022	NTS
Revised:	Revision No:
Drawing No:	W-8

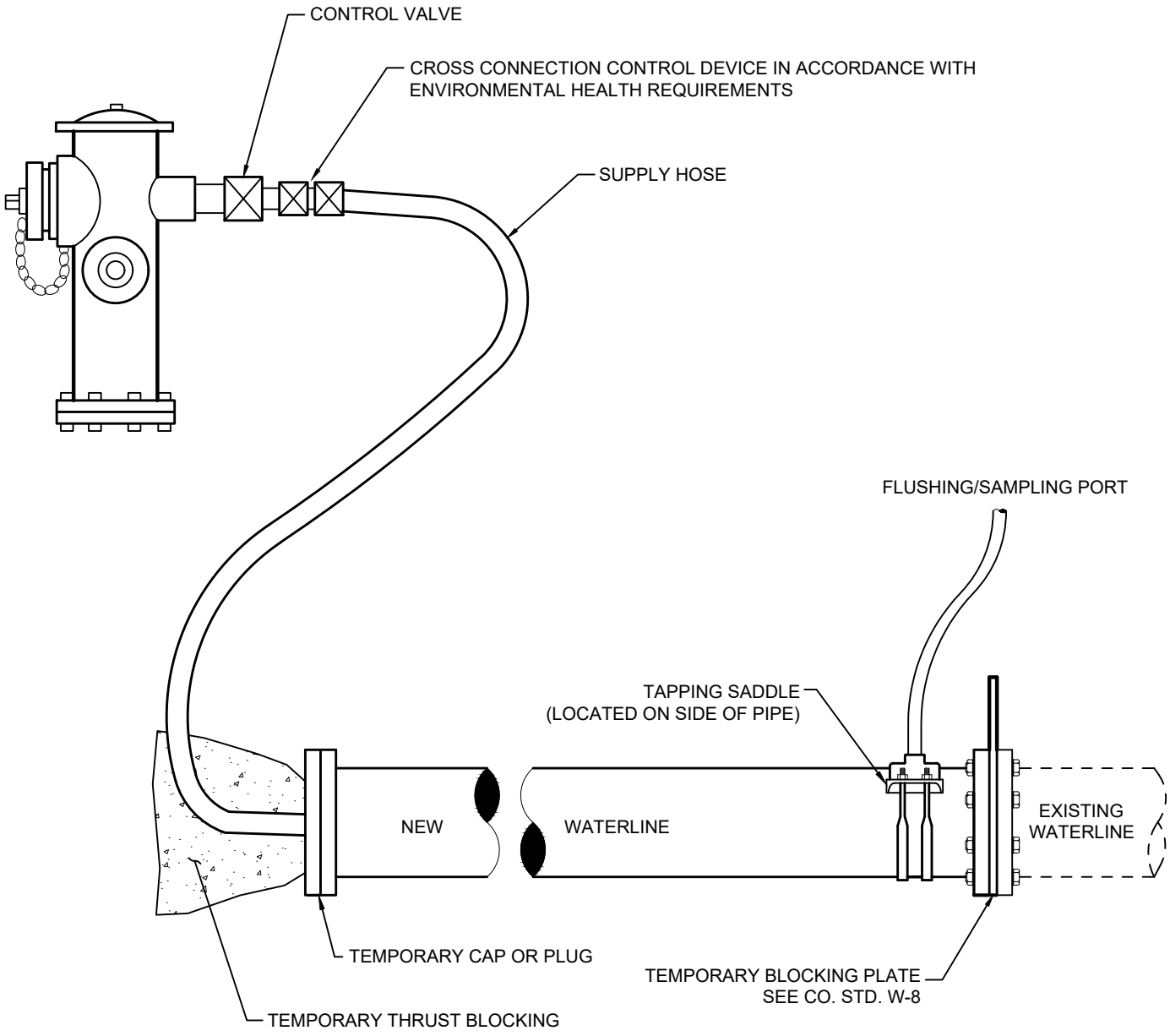

NOTES:

1. DIRECT CONNECTION TO THE EXISTING WATER SYSTEM SHALL NOT BE PERMITTED UNTIL THE NEW INSTALLATION HAS PASSED BACTERIA TESTING. MAINTAIN AIR GAP PER AWWA STD. C651.

DEPARTMENT OF PUBLIC WORKS - STANDARD DRAWINGS

WATERLINE
FLUSHING DETAIL

Issued:	Scale:
August 2022	NTS
Revised:	Revision No:
Drawing No:	W-9

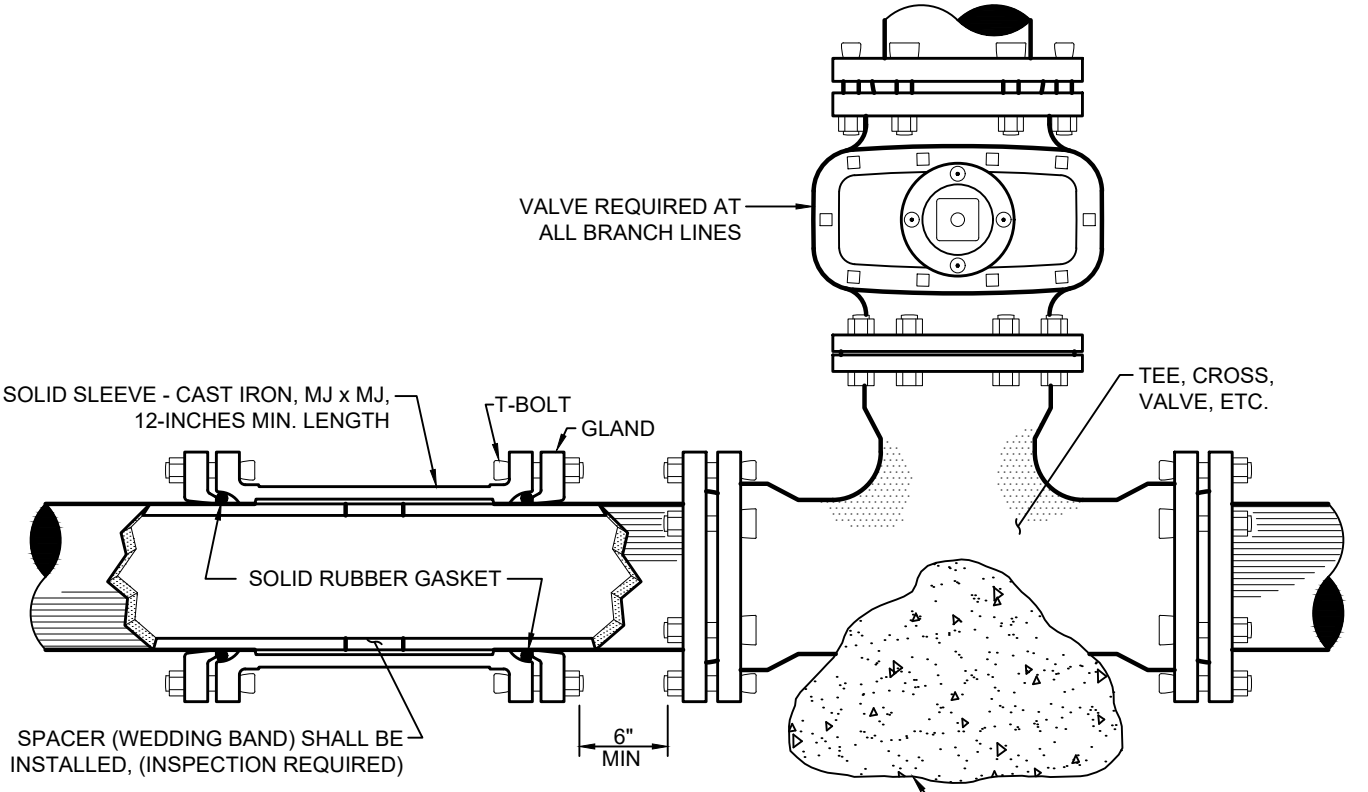

CUT-IN TEE

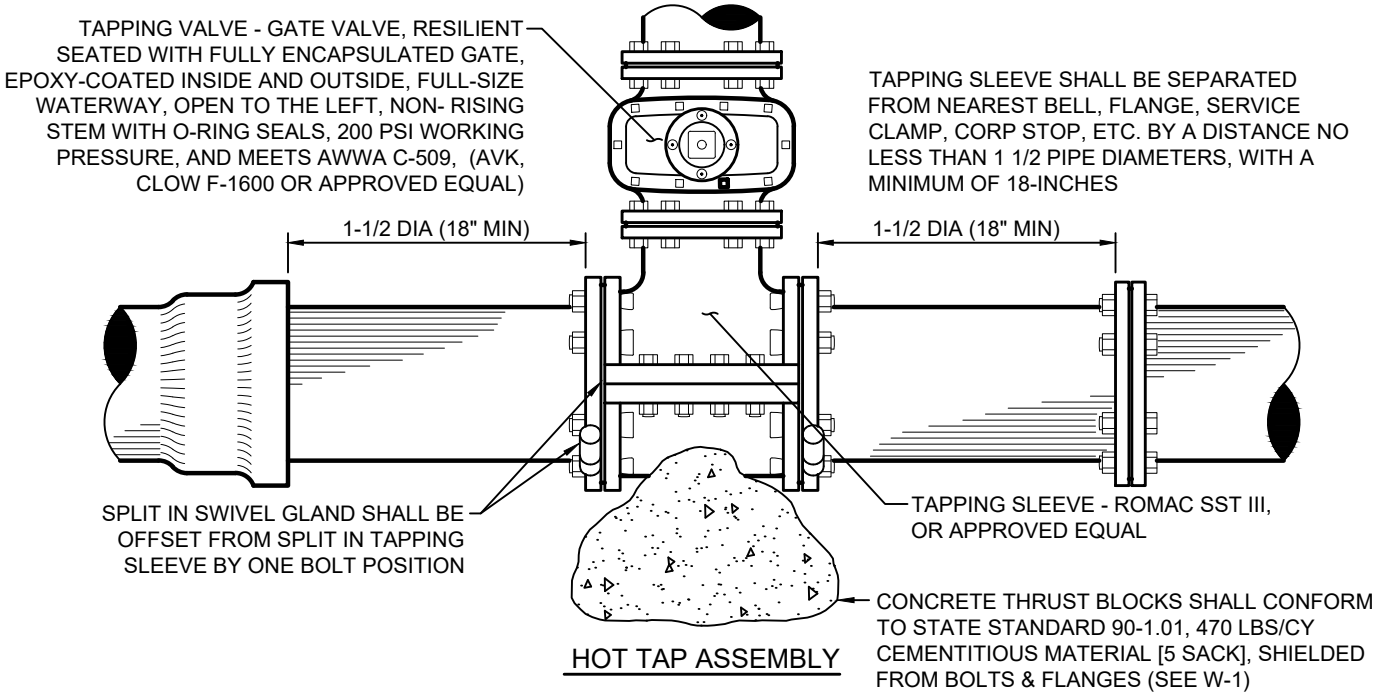

HOT TAP ASSEMBLY

DEPARTMENT OF PUBLIC WORKS - STANDARD DRAWINGS

WATERLINE

CUT-IN TEE & HOT TAP ASSEMBLY

Issued:	Scale:
August 2022	NTS
Revised:	Revision No:
Drawing No:	W-10